Space and scientific CMOS image sensors workshop
ESA Noordwijk
22-23 November ‘22

A visible light and NIR hybrid CMOS image sensor

A. Crouwels[1], A. Keefe[1], M. Z. Khan[1], D. Gautam[1], R. Nagarkar[1], G. Cai[1], J. Vermeiren[1], B. Dierickx[1], E. Tuovinen[2], S. Vähänen[2], K. Minoglou[3]

1. Caeleste, Mechelen, Belgium
2. Advacam OY, Espoo, Finland
3. ESA, ESTEC, The Netherlands

ESA contract 4000130176/20/NL/AR

Outline

Introduction
Key specifications
The pixel at ROIC-side
The analog readout chain
Detector layer
Hybridization
Electro-optical measurements
Conclusions

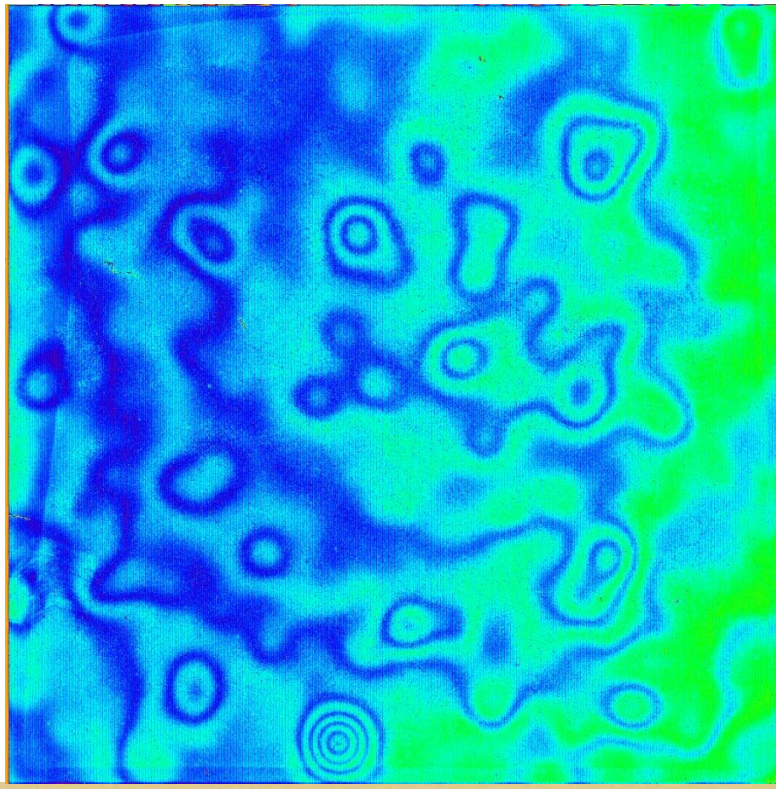

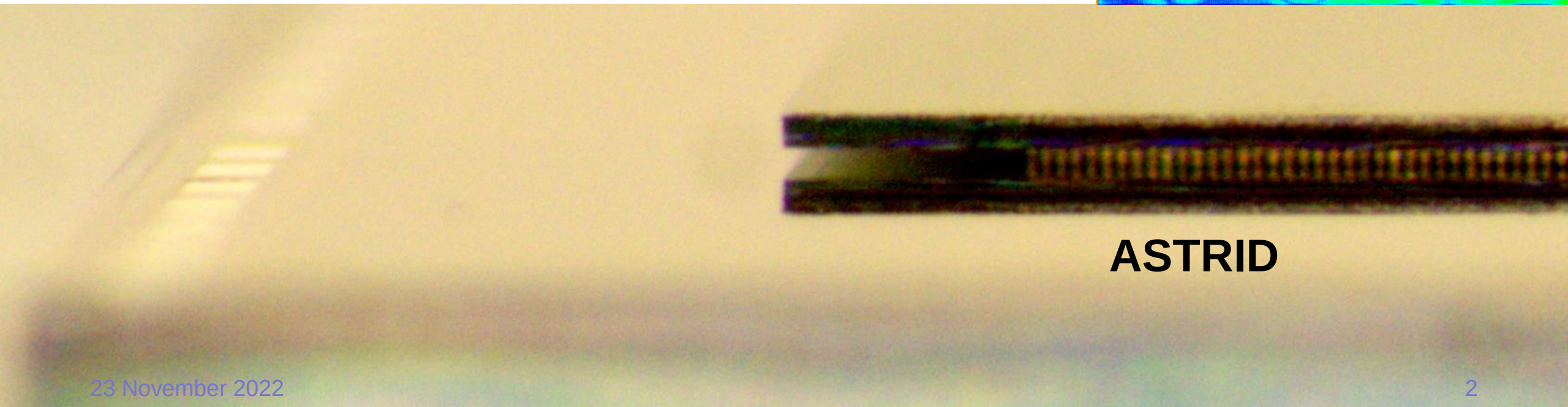

Introduction

caeleste

Hybrid image sensors are known from

- infrared imagers,
- X-ray detection,
- neural probes

Almost always this is the hybrid of a non-Silicon material to a Silicon ROIC.

In this work we present a Si-Si hybrid: a Silicon detector layer on a Silicon ROIC.

Why?

- Best of both worlds, by independent optimization of
    - a plain CMOS ROIC
    - a very thick HIRES detector layer ➔ strong electro-optical performance
        - Ultimate NIR response
        - Fill Factor of 100 %
        - Fully depleted pixels by independent substrate bias
- No thermal expansion mismatch problems, as with IR hybrids.

Introduction

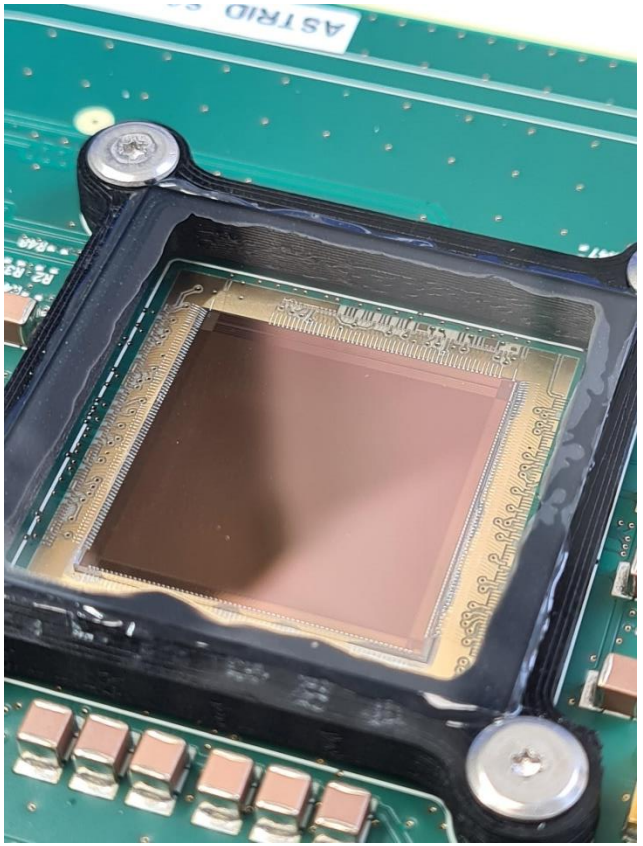

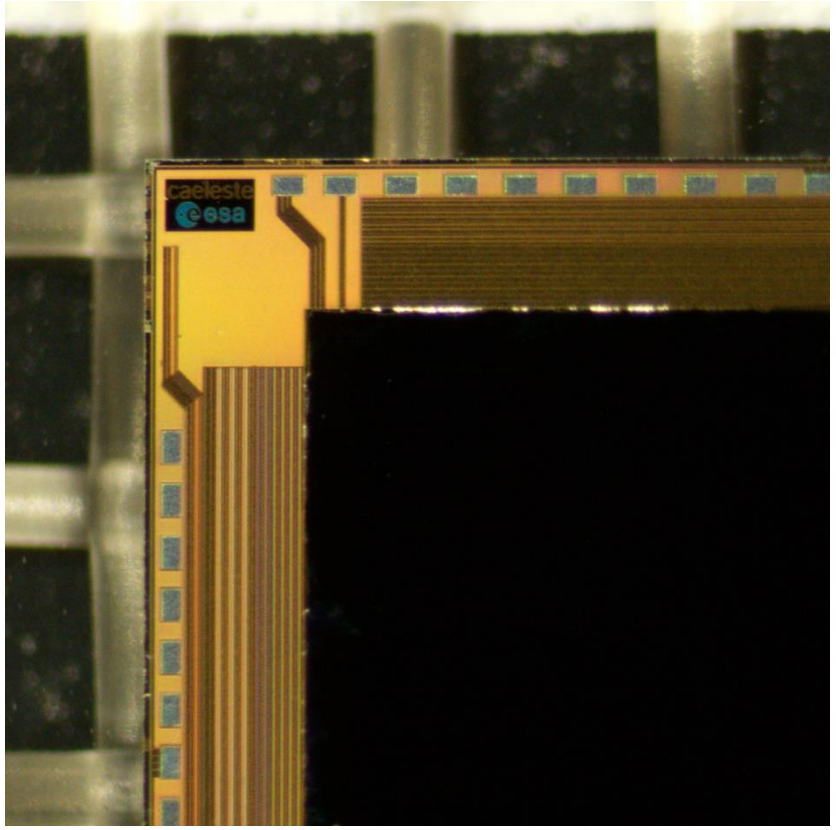

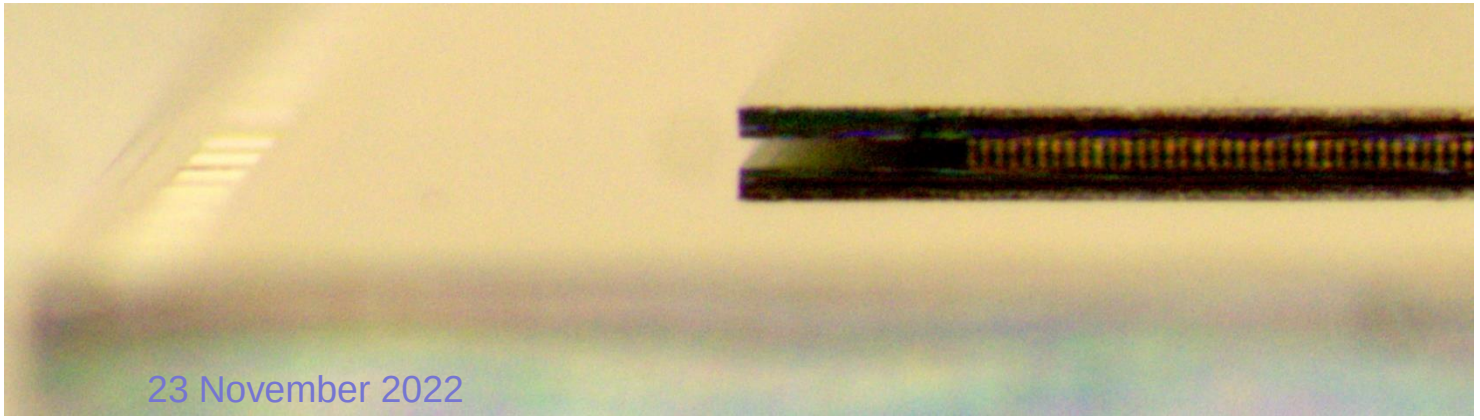

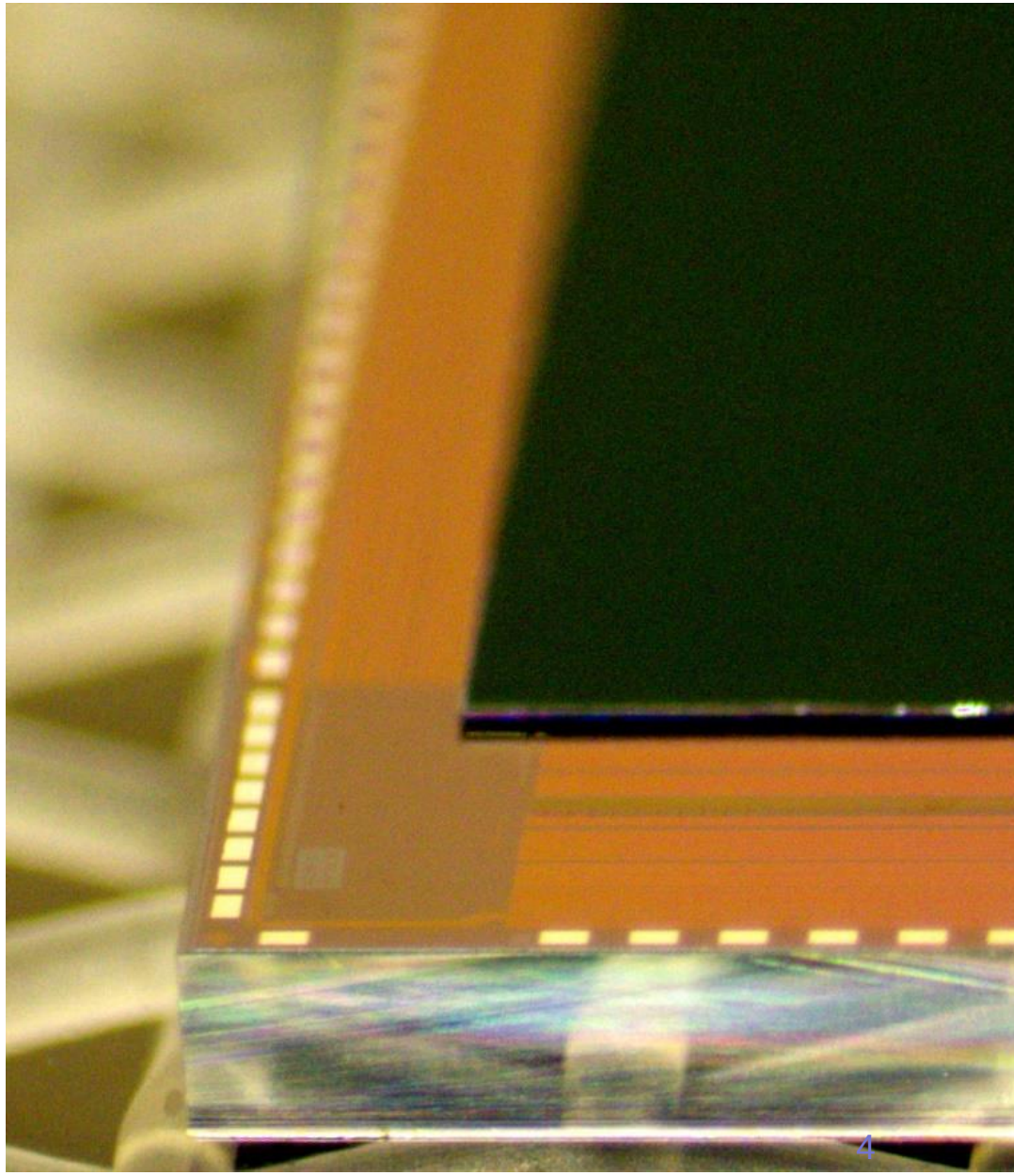

Key specifications

caeleste

Parameter	Value
Number of pixels	1024 x 1024
Pixel size	20µm x 20µm
Readout modes	Global Shutter Rolling Shutter
Windowing	Y-direction
QE x FF 450nm - 950nm 580nm – 920nm Peak @ 805nm	 > 50% > 80% 96%
Full well	[High Gain] 60ke$^-$ [Medium Gain] 300ke$^-$ [Low Gain] 1.2Me$^-$
Read noise [High Gain]	36 e^-_{rms}
Low noise modes	Column gain, Non-Destructive Readout
Radiation hardness	TID 20krad Proton fluence $1*10^{11}$ protons/cm^2
Frame rate	40Hz (4 output channels @ 15MHz)

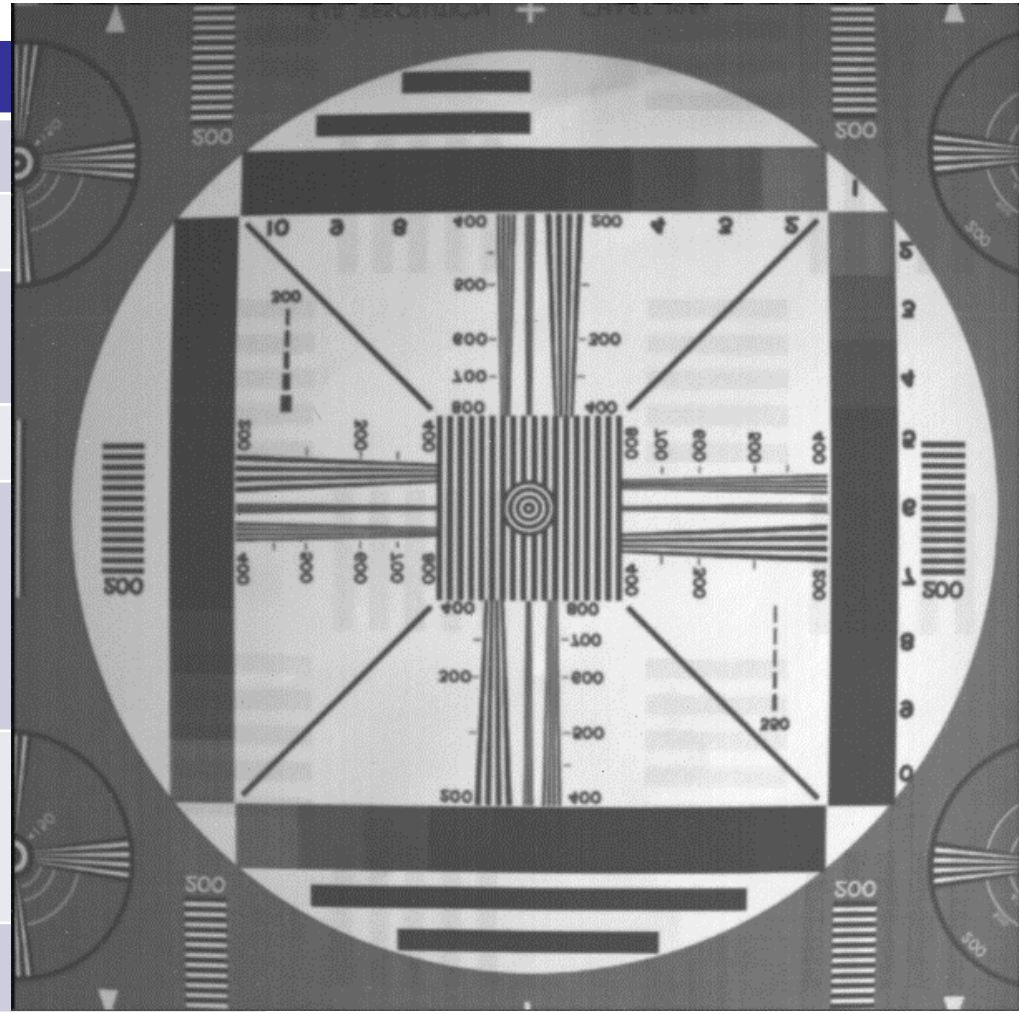

The pixel at the ROIC-side

caeleste

Core: 3T pixel

3-level HDR

- High Gain: 60ke$^-$
- Medium Gain: 300ke$^-$
- Low Gain: 1.2Me$^-$

Global shutter by in-pixel memory

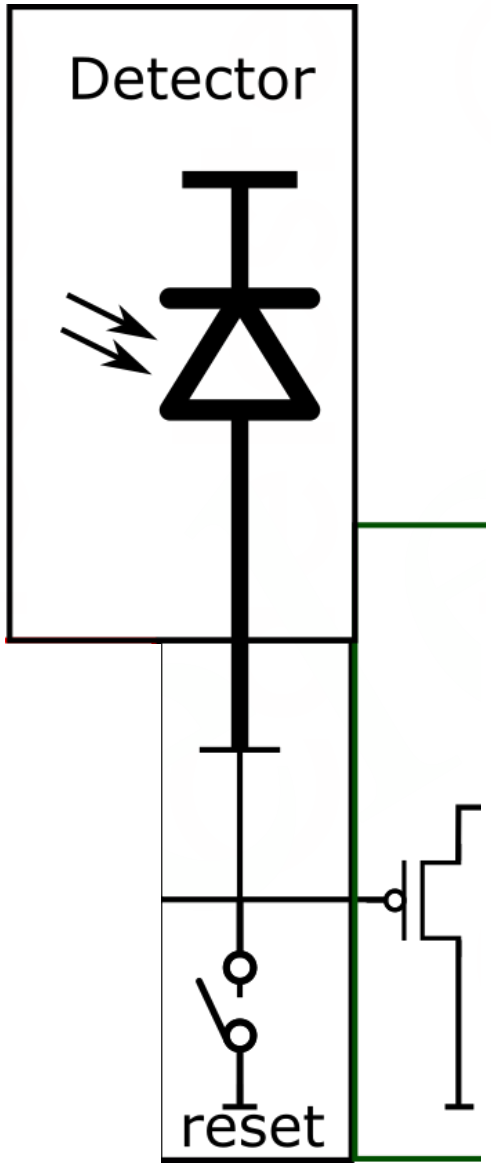

The pixel at the ROIC-side

caeleste

Core: 3T pixel

3-level HDR

- High Gain: 60ke$^-$
- Medium Gain: 300ke$^-$
- Low Gain: 1.2Me$^-$

Global shutter by in-pixel memory

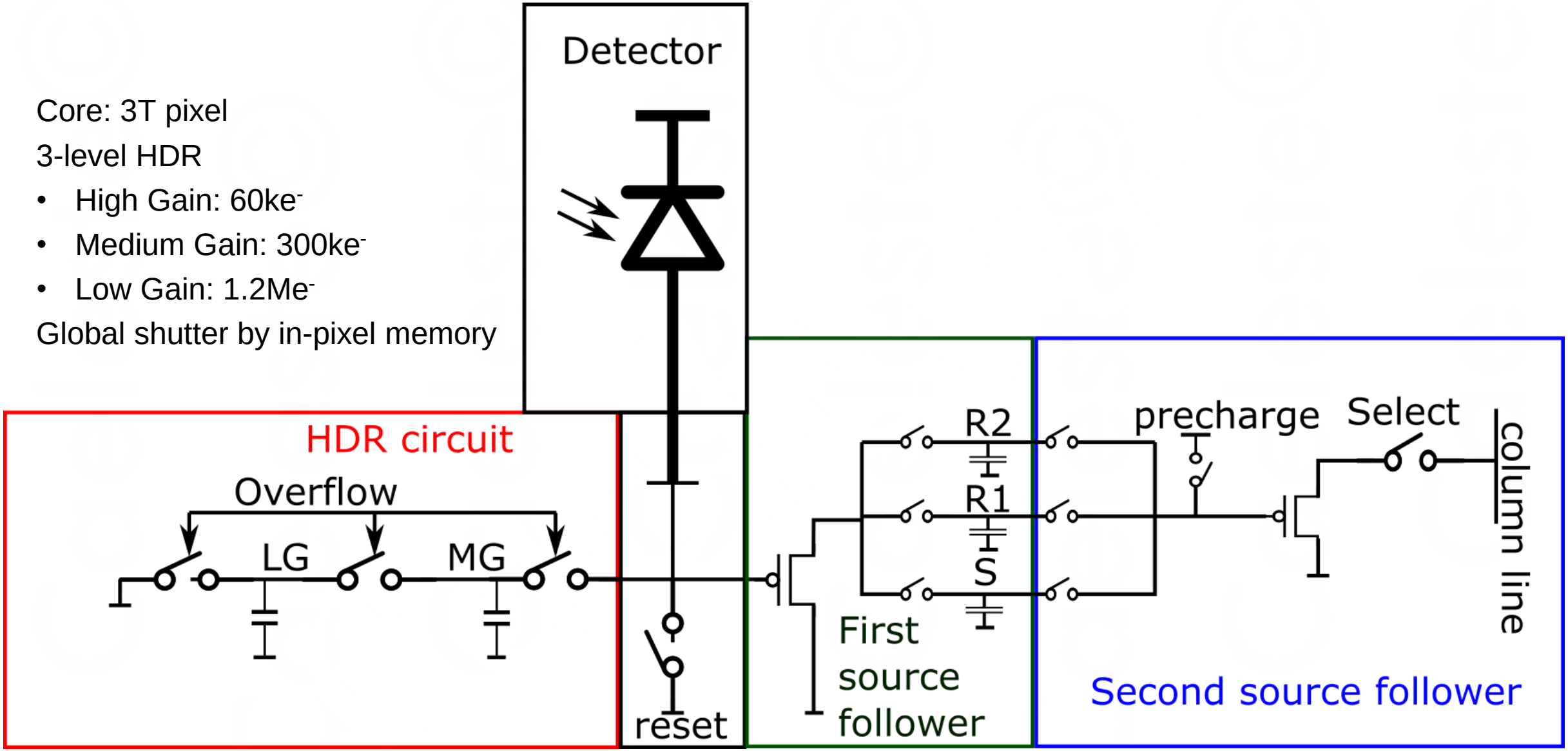

Analog readout chain

caeleste

Programmable column gain [x1, x2, x4]

Odd/Even row readout for parallelization

Video bus multiplexing

Pseudo- to fully differential conversion

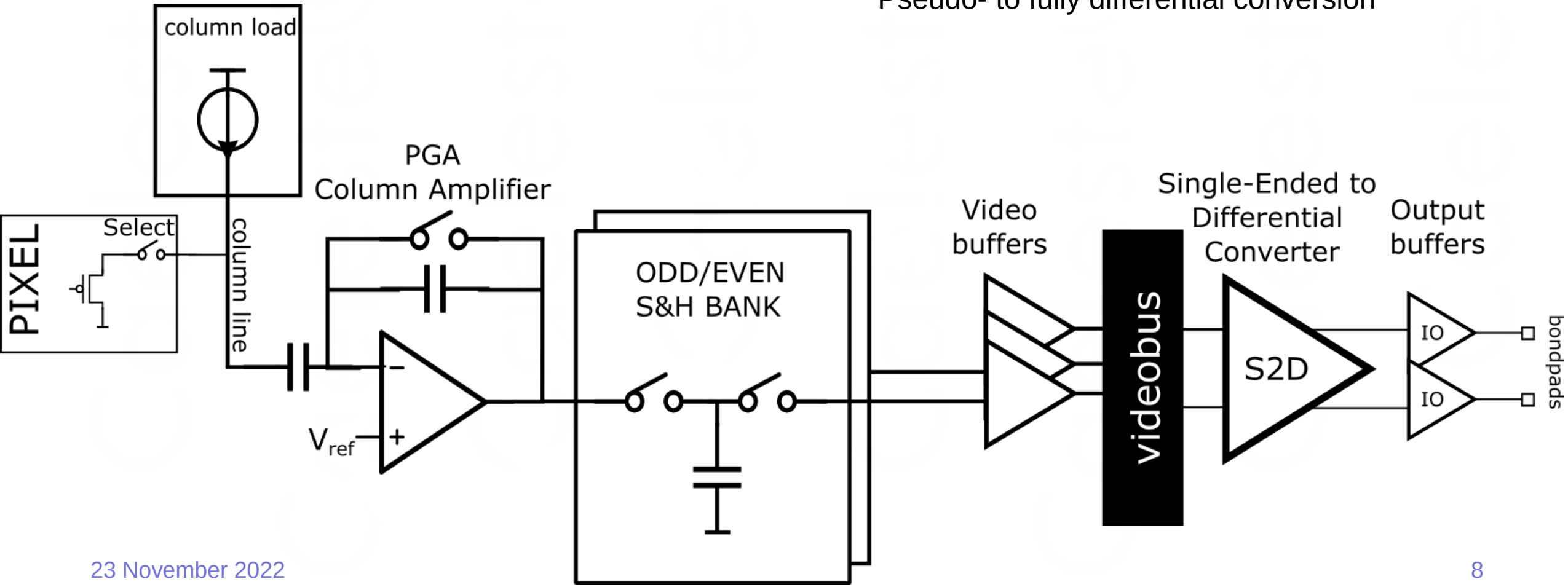

The pixel at ROIC-side

caeleste

ROIC-side contains a pixel electrode
Passivation is opened above this pixel electrode
Pillar is grown from this ROIC-side opening
Solder caps at top of pillar

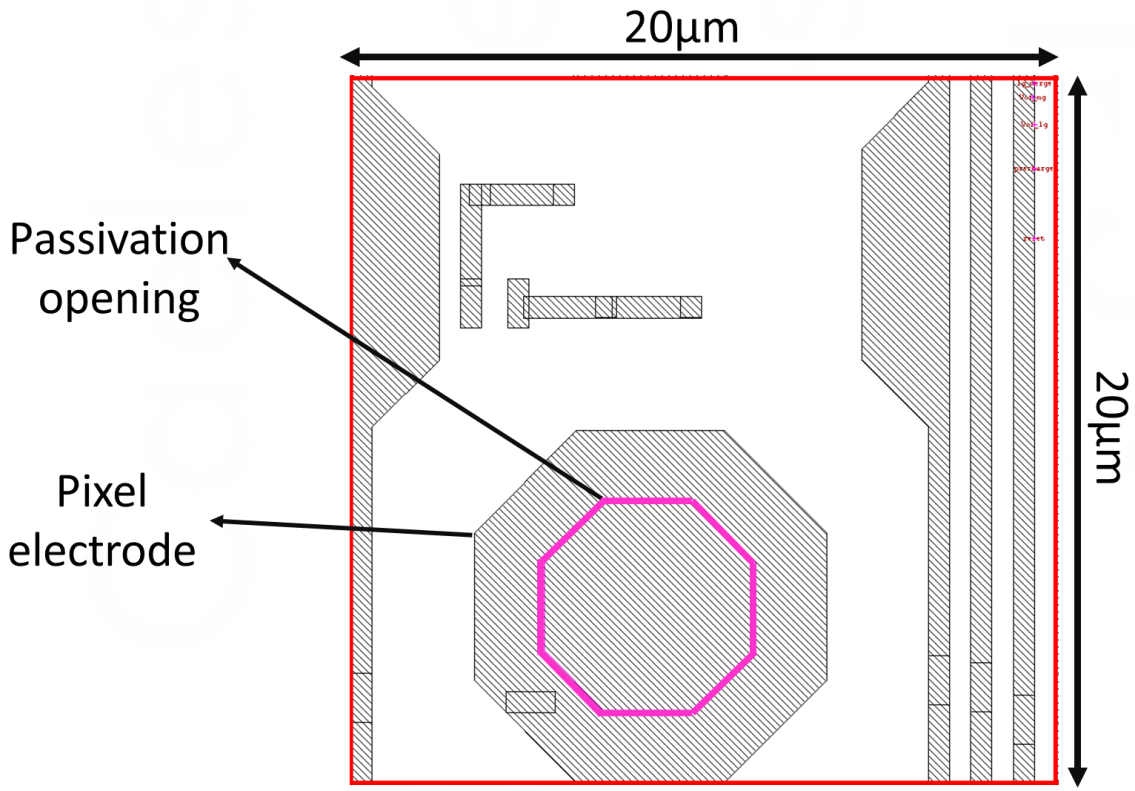

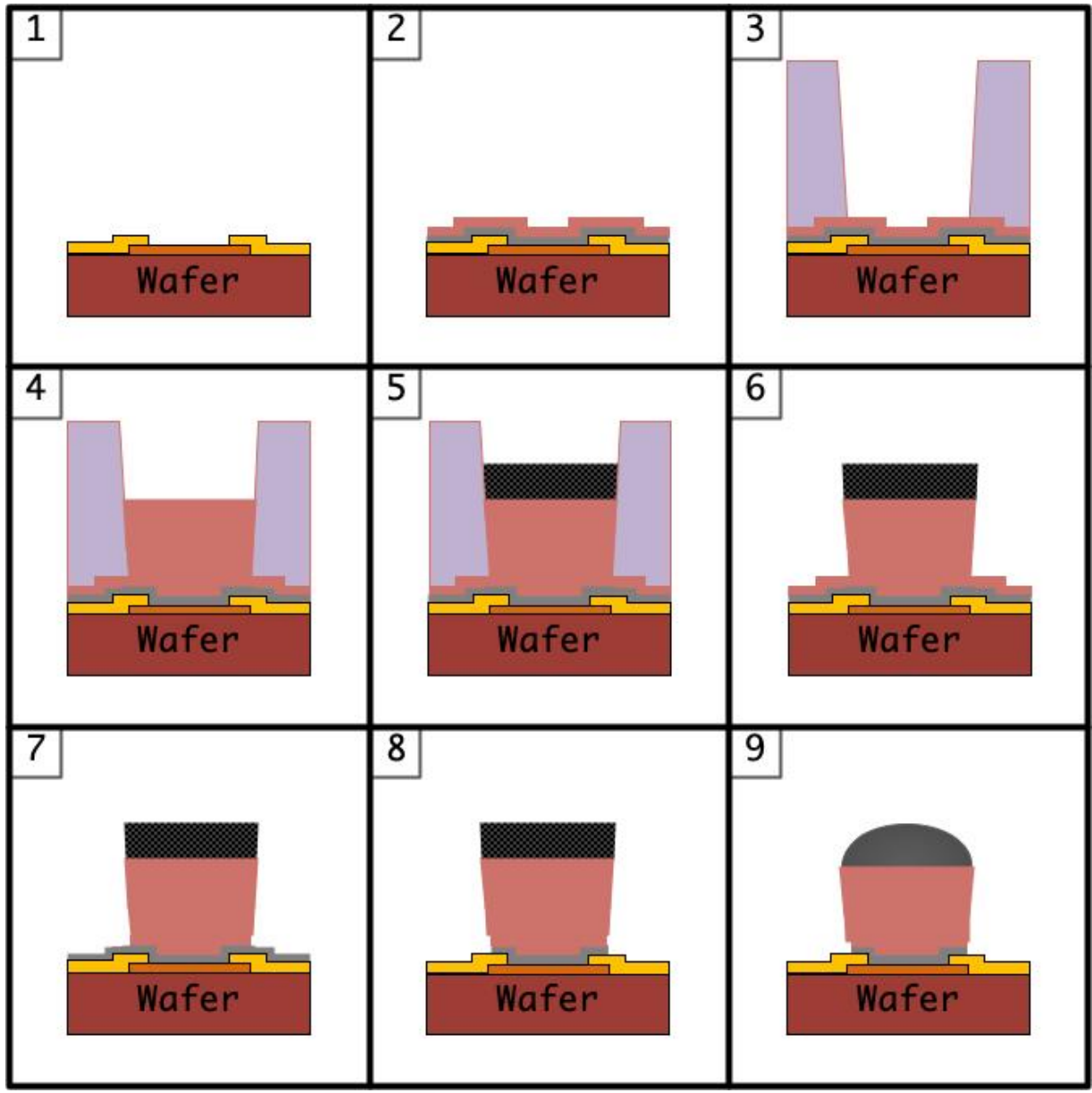

Detector layer

high resistivity Si wafers

- ~15kOhm-cm
- 50µm thick

Solderable

Under-Bump Metallization (UBM) pads at each pixel pad.

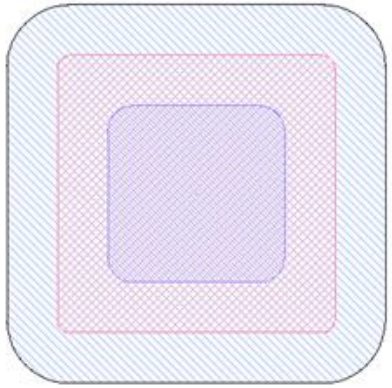

Metal, implant & contact

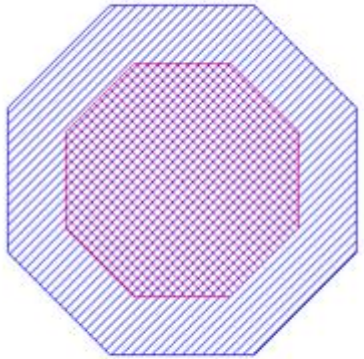

UBM & passivation opening

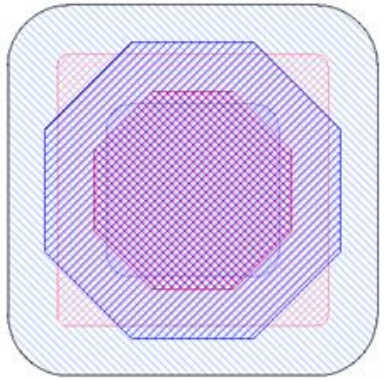

All layers

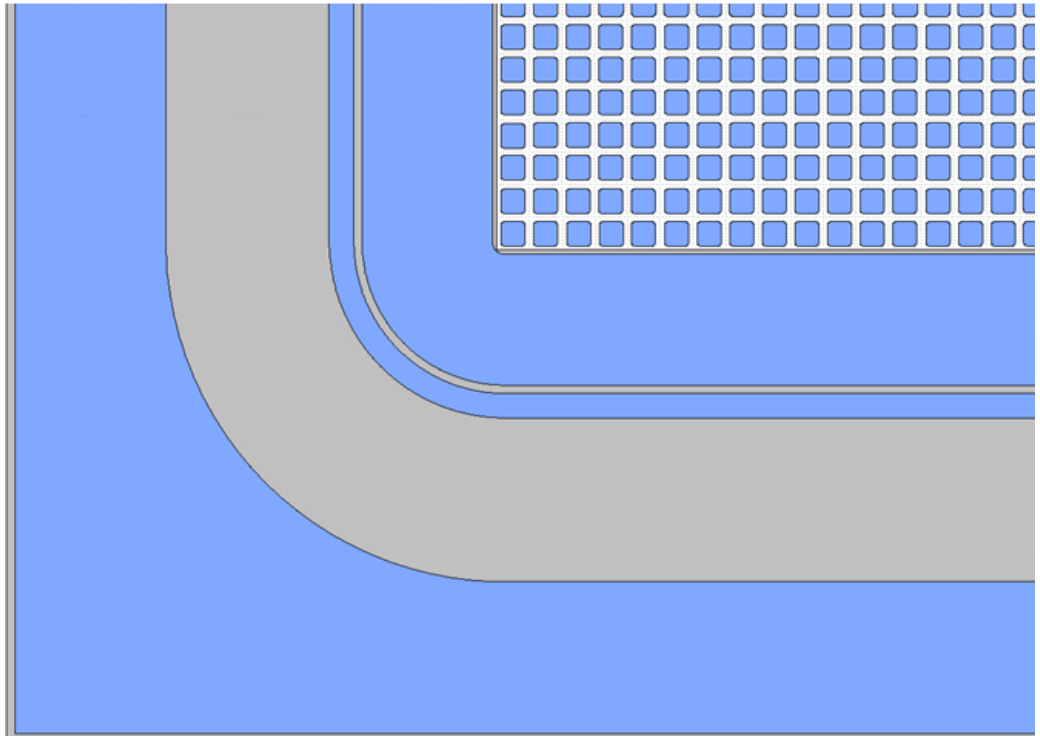

Hybridization

caeleste

Solder caps on ROIC pillars are the flip-chip interconnects

UBM at Si Detector allows soldering

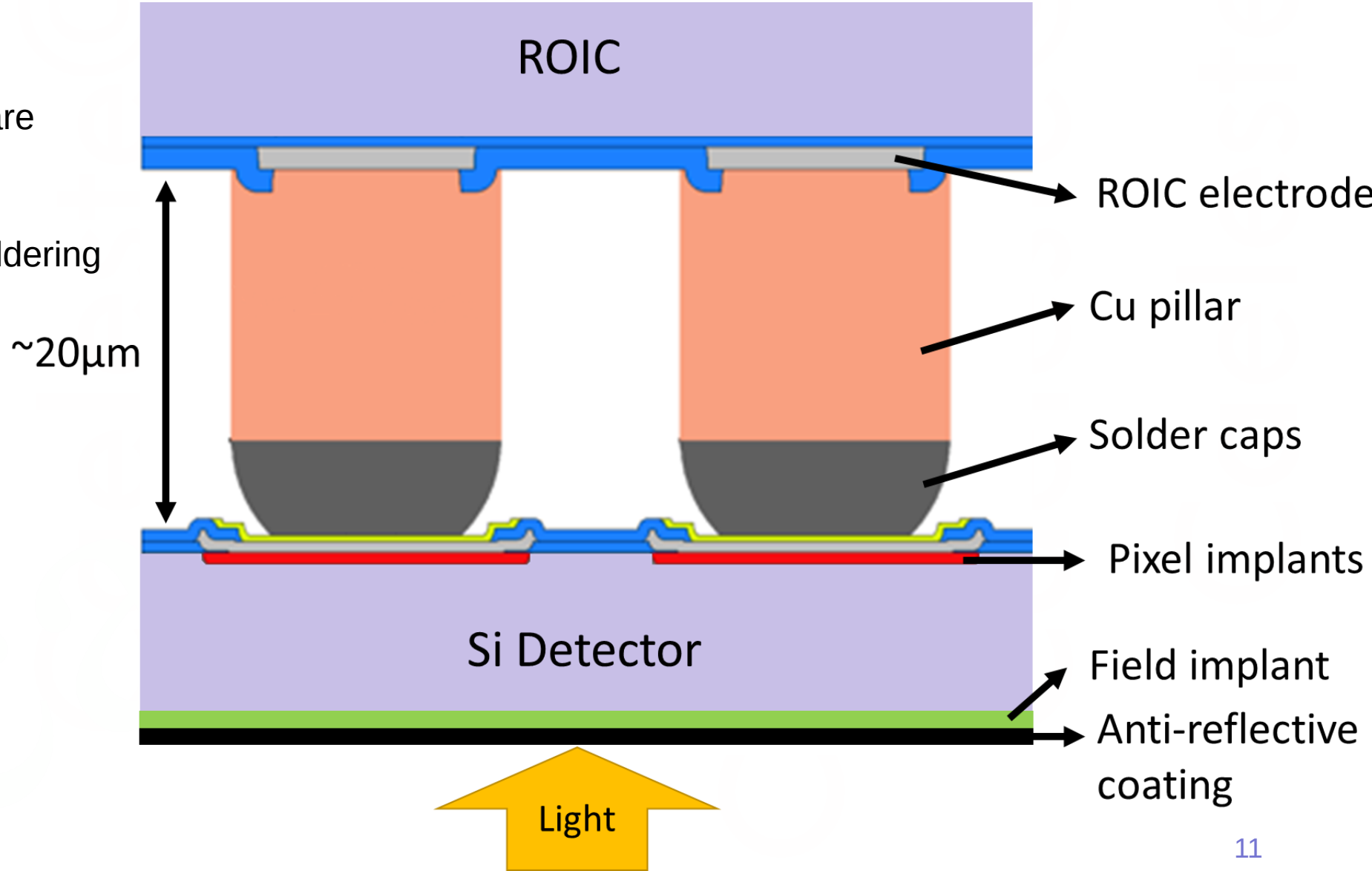

Electro-optical measurements - photo response

caeleste

Photo response for 3 available pixel gains

Showing off full well and Charge-to-Voltage Factor

- High Gain
  - Full well: 58.4ke$^-$
  - CVF: 32.2 µV/e$^-$
- Medium Gain
  - Full well: 302 ke$^-$
  - CVF: 6.1 µV/e$^-$
- Low Gain
  - Full well: 1.18 Me$^-$
  - CVF: 1.3 µV/e$^-$

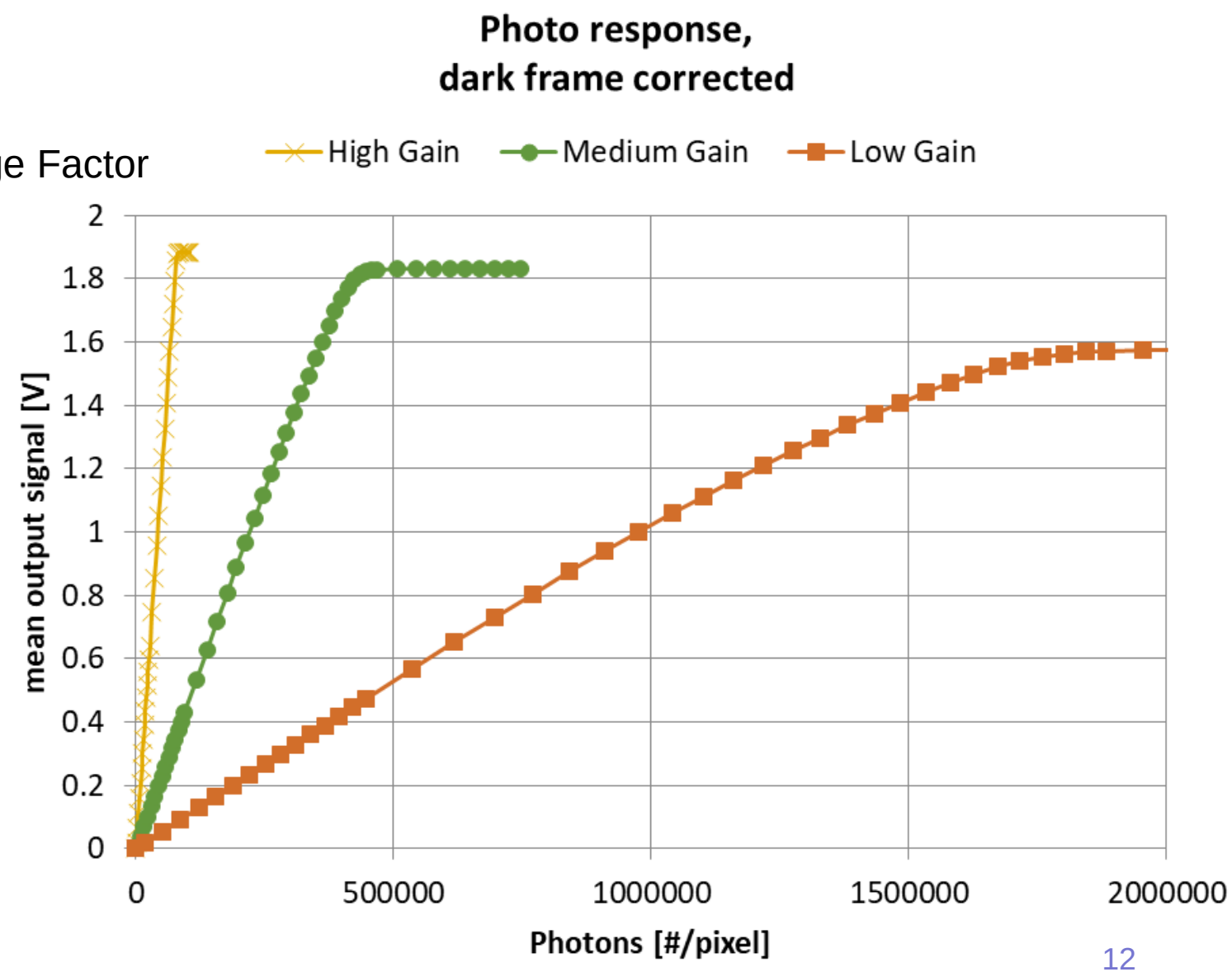

Electro-optical measurements - QE

caeleste

Comparison between theoretical & observed QE for

- Hybrid sensor (50µm thick detector)
- ELFIS2 sensor
  - 22µm
  - 12µm

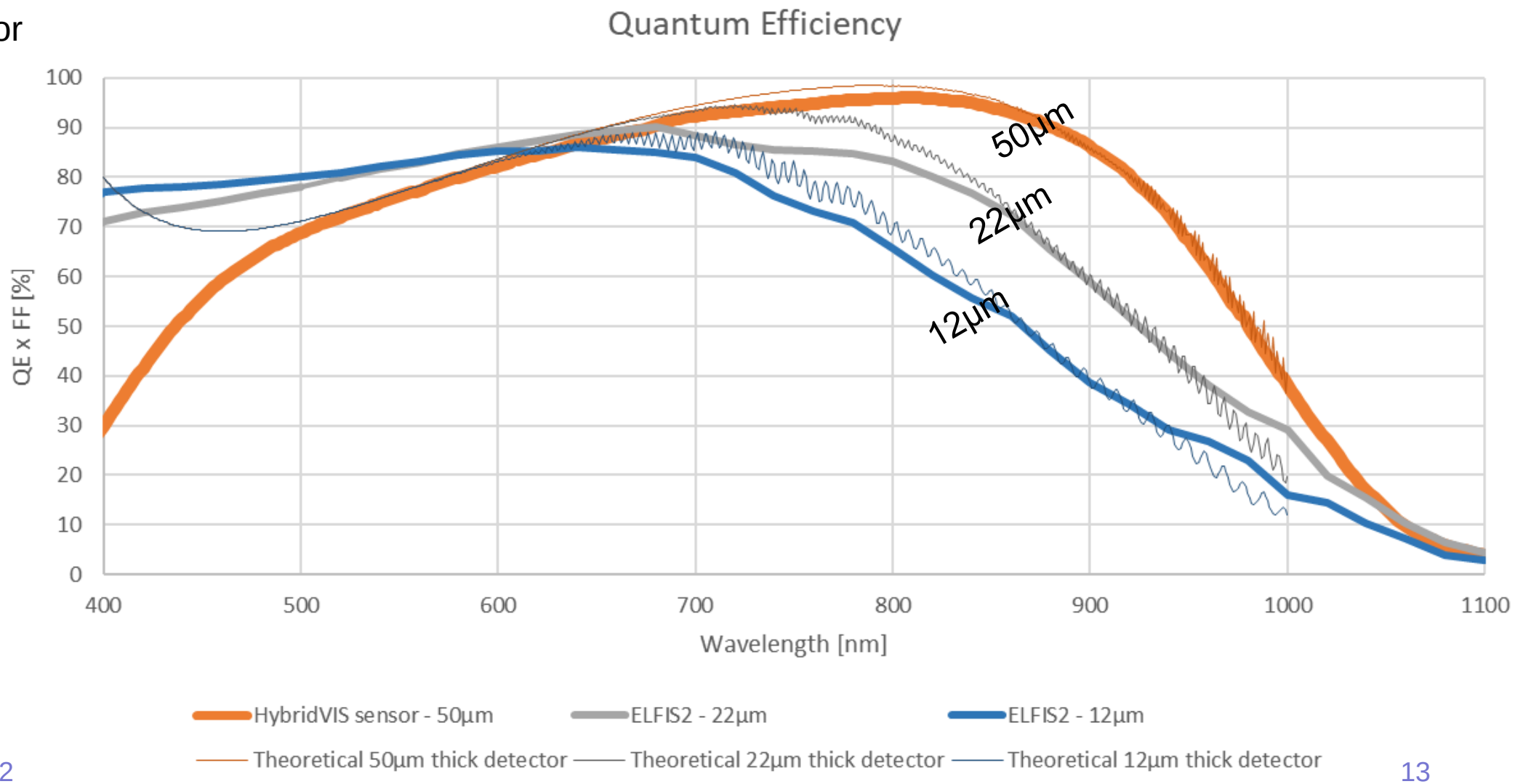

Electro-optical measurements - Noise

For a C_{FD} = 9.9fF

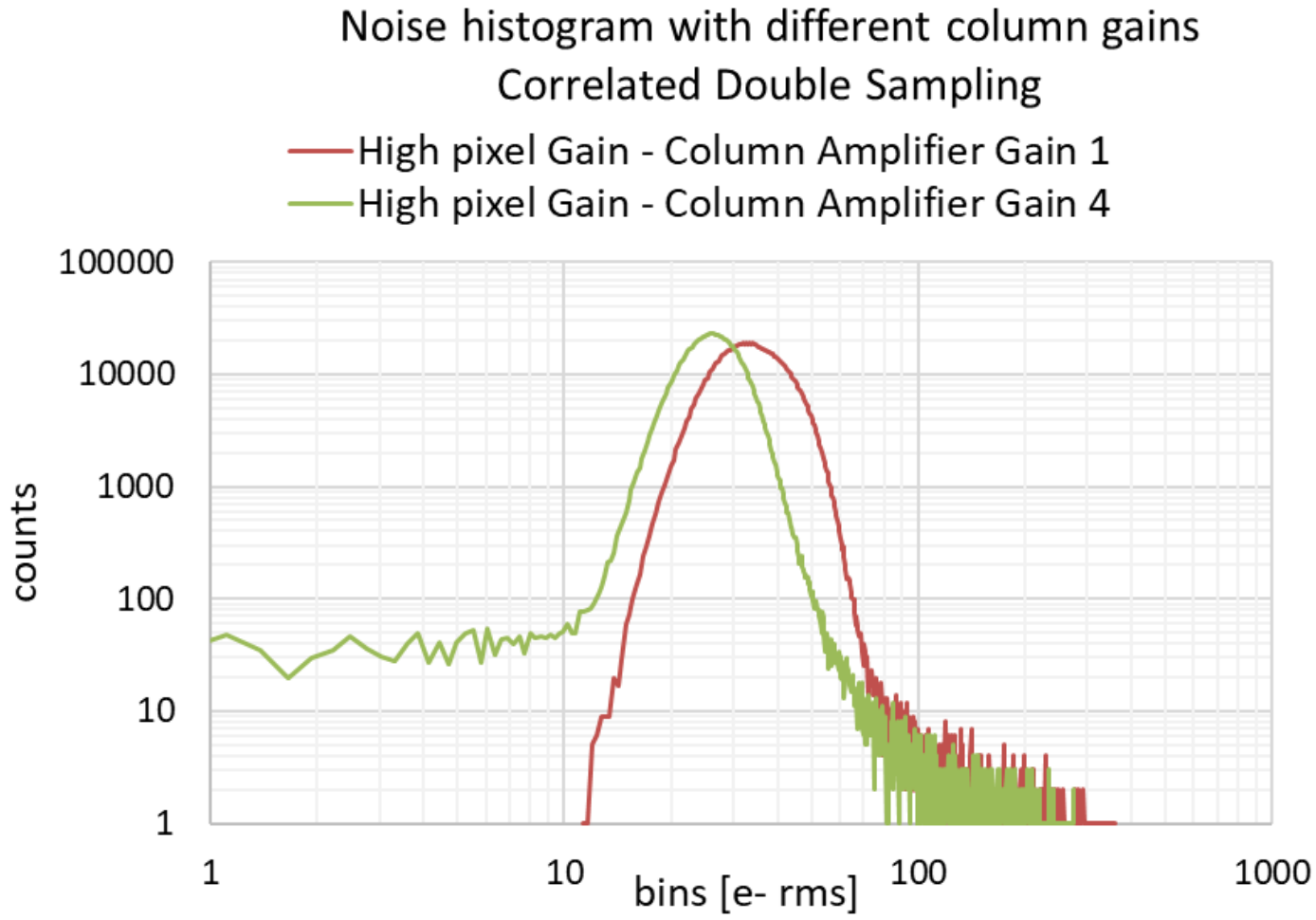

Read out mode	Column gain	noise [e^-_{rms}]
Correlated Double Sampling	1	36
	4	28

Conclusion

caeleste

Demonstrated manufacturability of hybrid Si-Si sensor module for visible & NIR light

Advantages compared to monolithic sensor:

- Improved Near-InfraRed QE due to thick Si Detector wafer options
- Straightforward fully depletion by independent resistivity & biasing of the detector Si-wafer
- Essentially BSI Fill Factor quality

Disadvantages compared to monolithic sensor:

- Limited to 3T-pixel topology, no true CDS as in 4T-pixels
- Decreased sensitivity (CVF), inherent to hybrid architectures
- Keep eye on mechanical stability of the modules
- Multiple additional steps required in production

Future work

- Evaluating low noise modes (NDR, …)
- MTF, Parasitic Light Sensitivity
- Qualification

Questions?