A 1.3M Pixel 34,700fps Global-Shutter BSI Imager with HDR and Motion Blur Suppression Capability

IISW, 21 Sept. 2021

G. Cai[1], K. Tajima[2,3], A. Van Hoorebeeck[1], P. Stampoglis[1], B. Luyssaert[1], B. Dierickx[1], C. Gokel[1], T. Van Uffelen[1], G. Ruttens[1], J. Yamane[2], I. Ishii[3]

1. Caeleste CVBA, Mechelen, Belgium
2. Photron Limited, Tokyo, Japan
3. Hiroshima University, Hiroshima, Japan

For machine vision, fast event analysis

- **High resolution: 1280 x 1024**
- **High speed: 34,700fps**
- **No distortion: Global shutter**
- **High sensitivity: BSI**

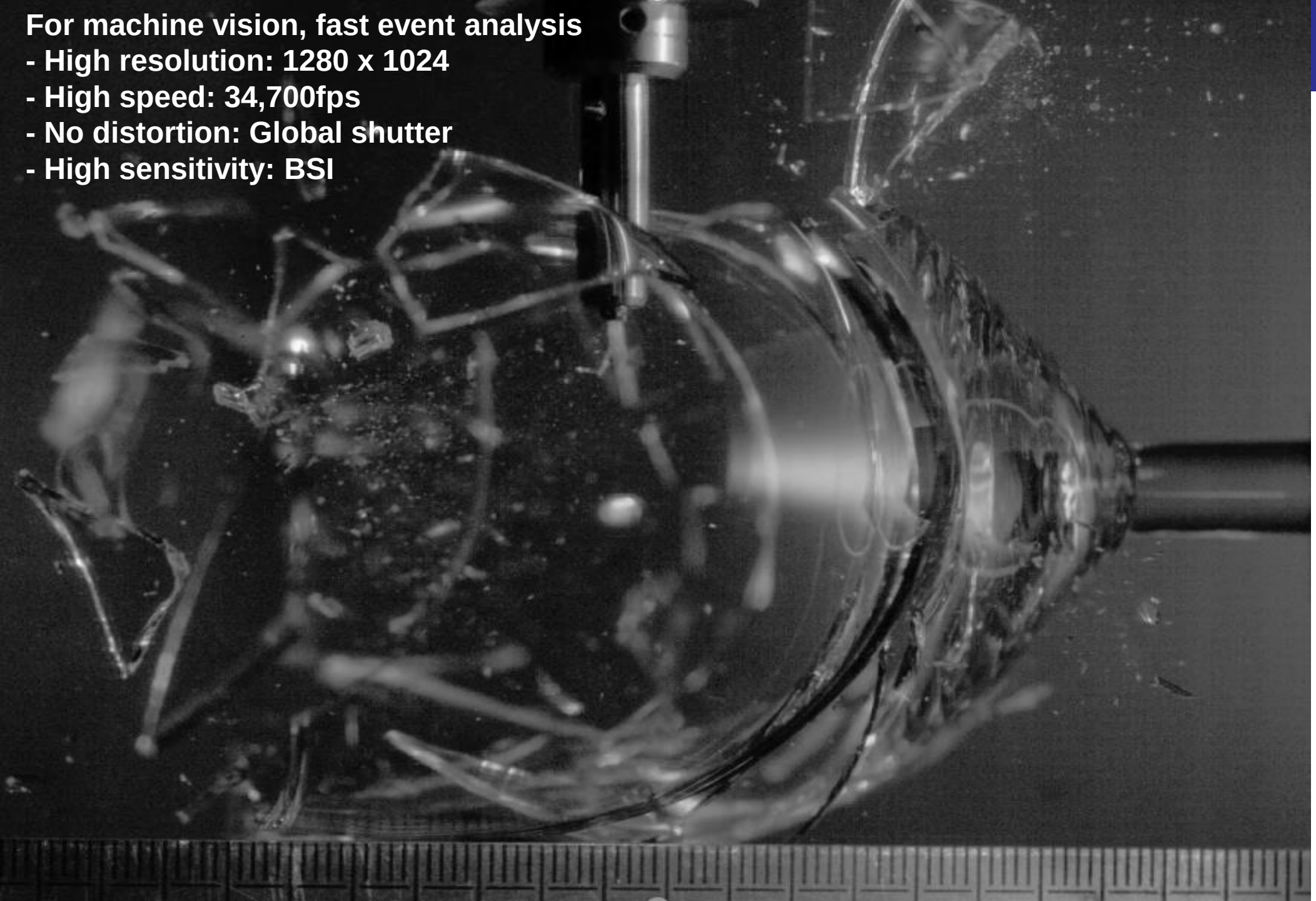

caeleste

Sensor

- Pixel array is split into 4 quadrants
- Readout starts from the center
- Each quadrant has 128 output channels
- Each channel can run at maximumly 100Mpix/s

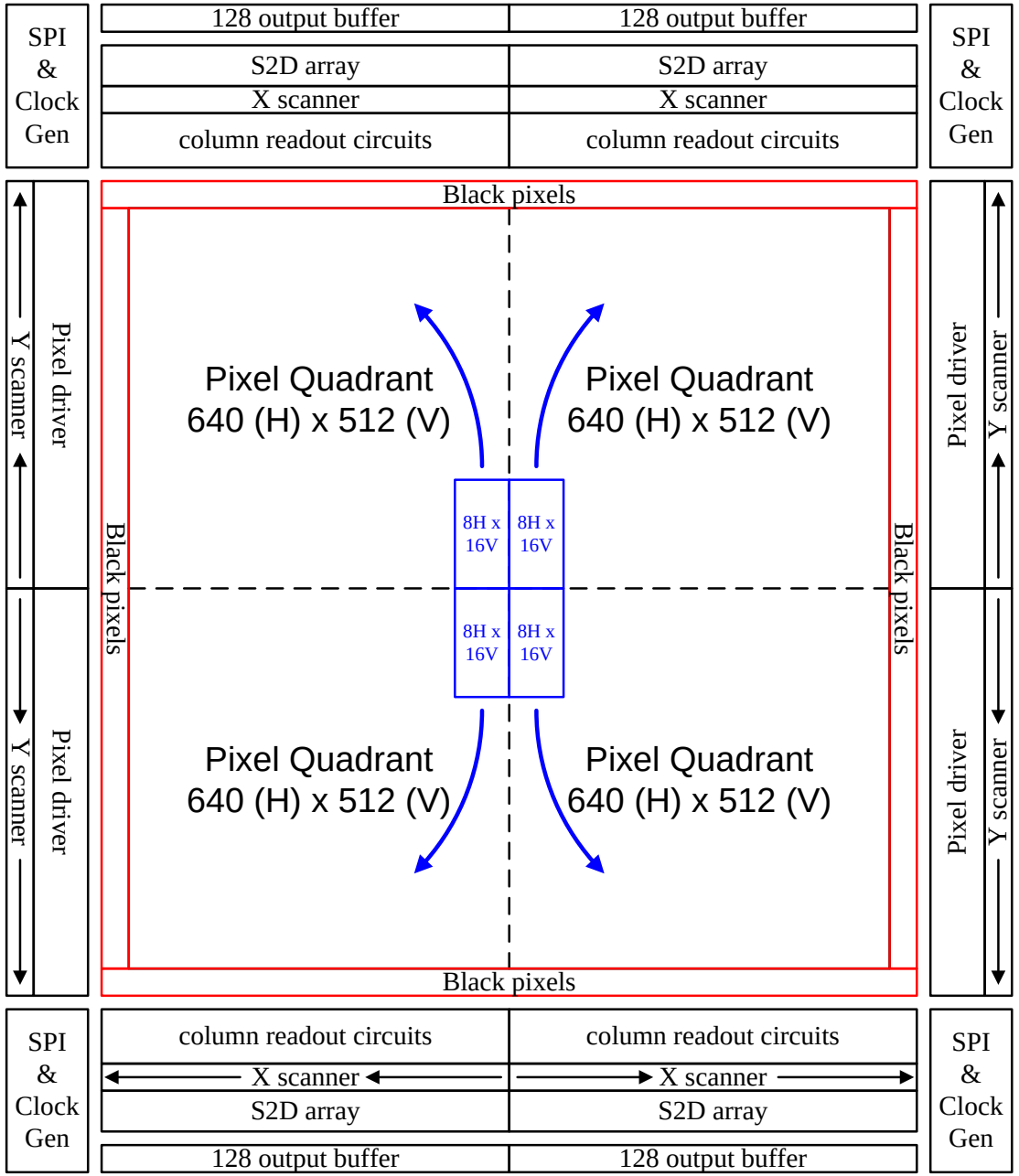

Pixel

caeleste

Schematic

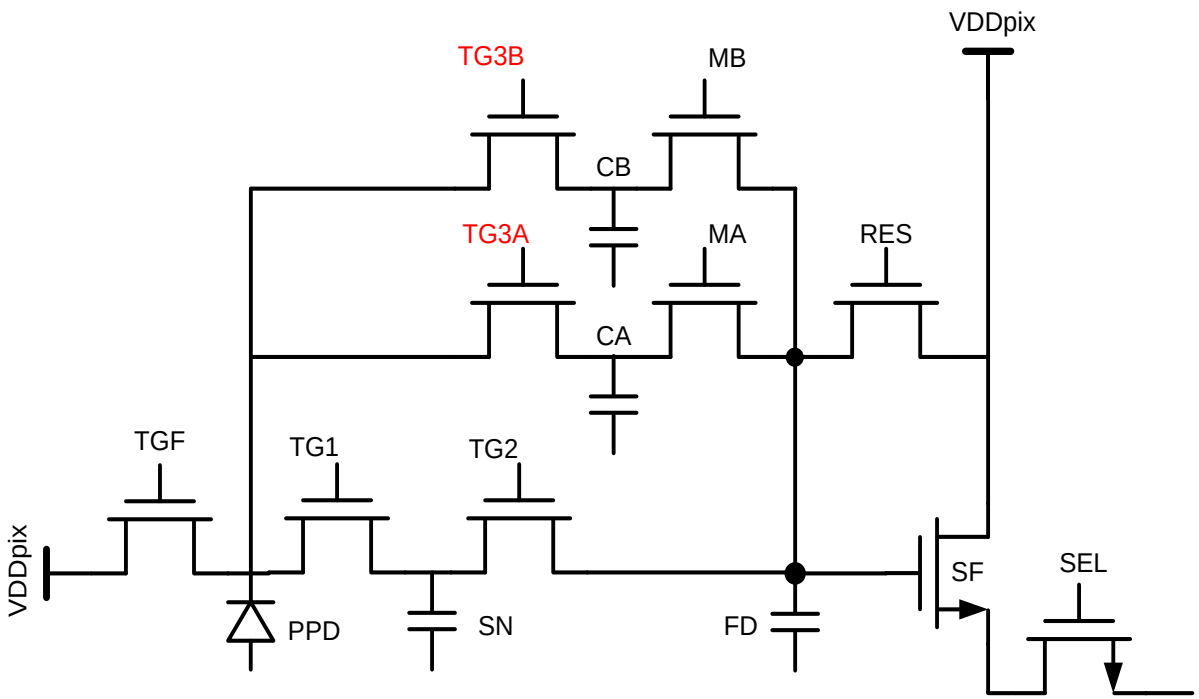

Timing diagram

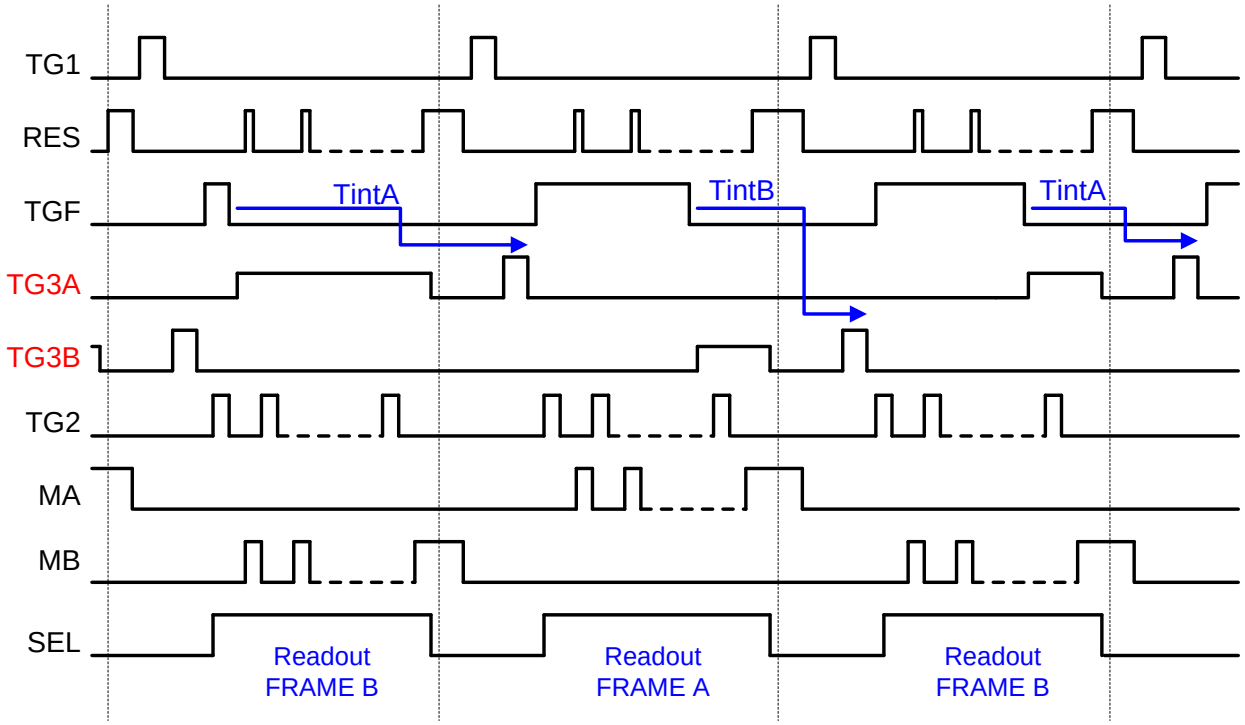

- 10T pixel
- TG3A & TG3B can biased at 3 levels

Readout Chain

caeleste

Column S&H stage

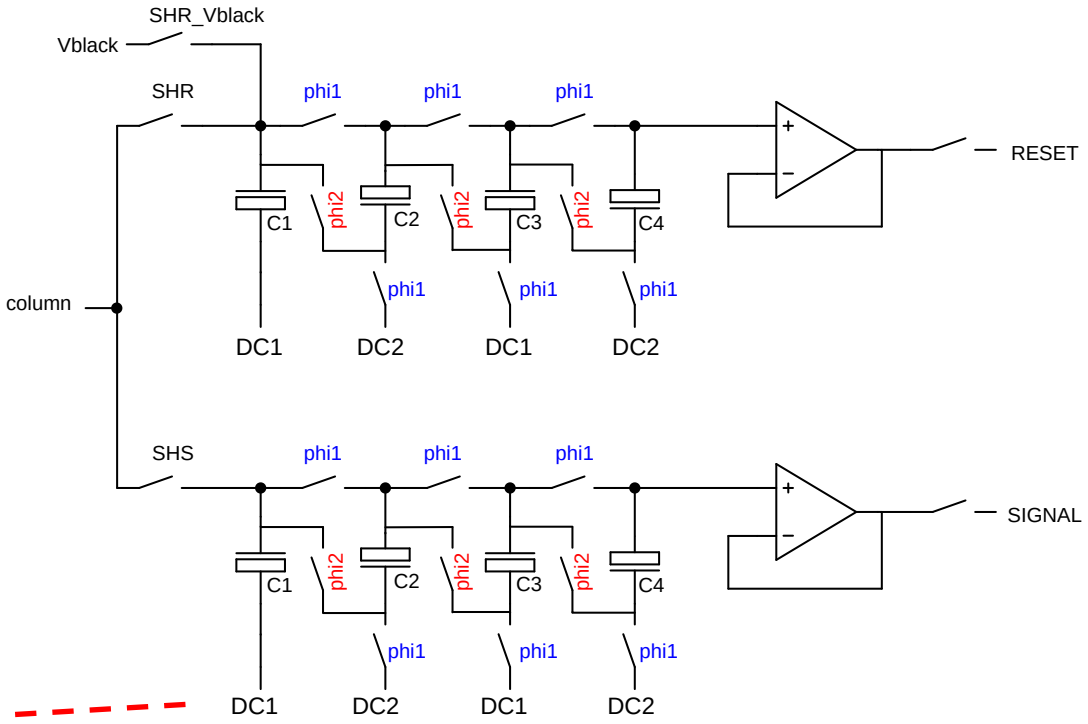

Pixel readout chain

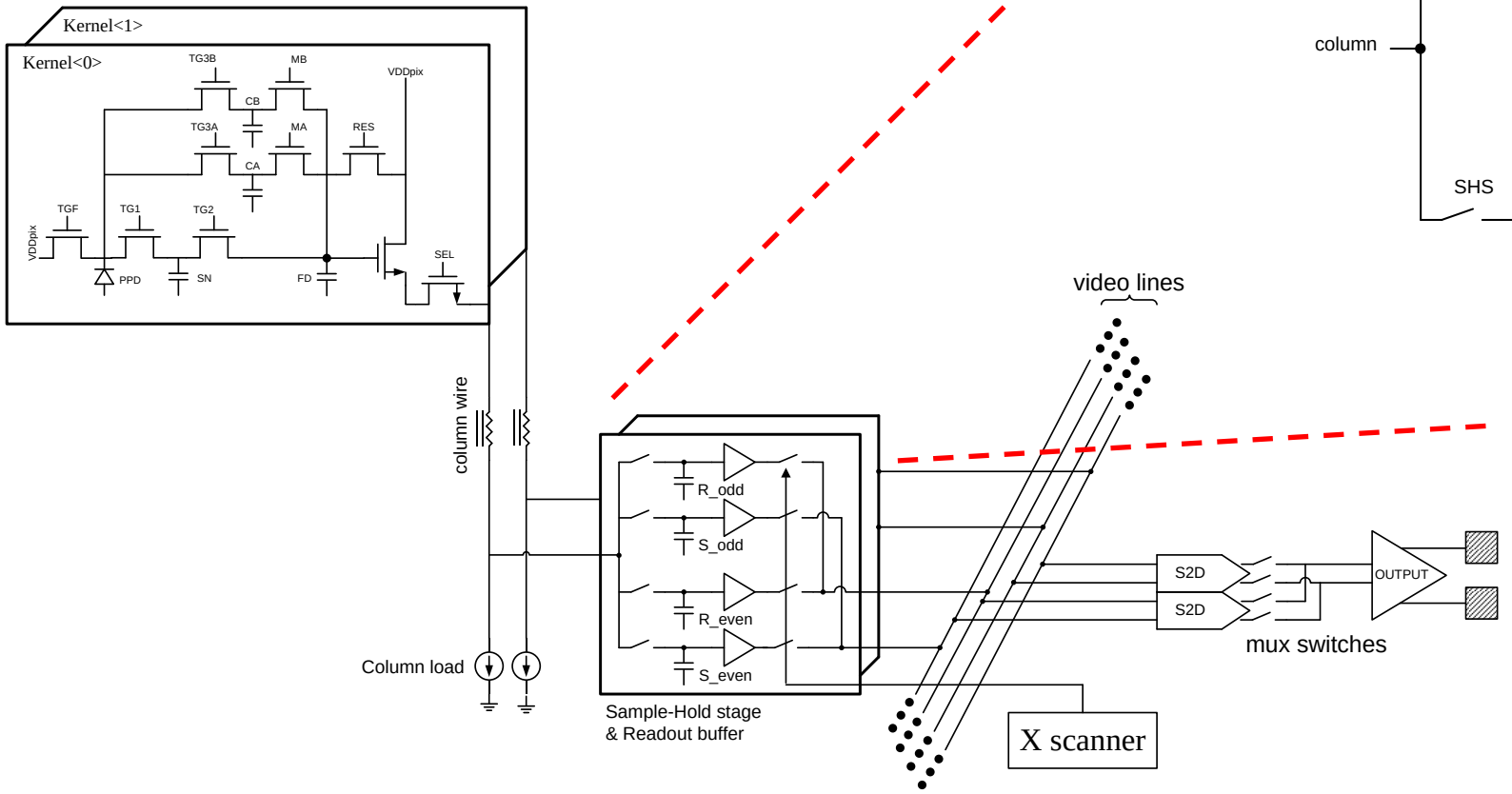

Motion Blur Suppression

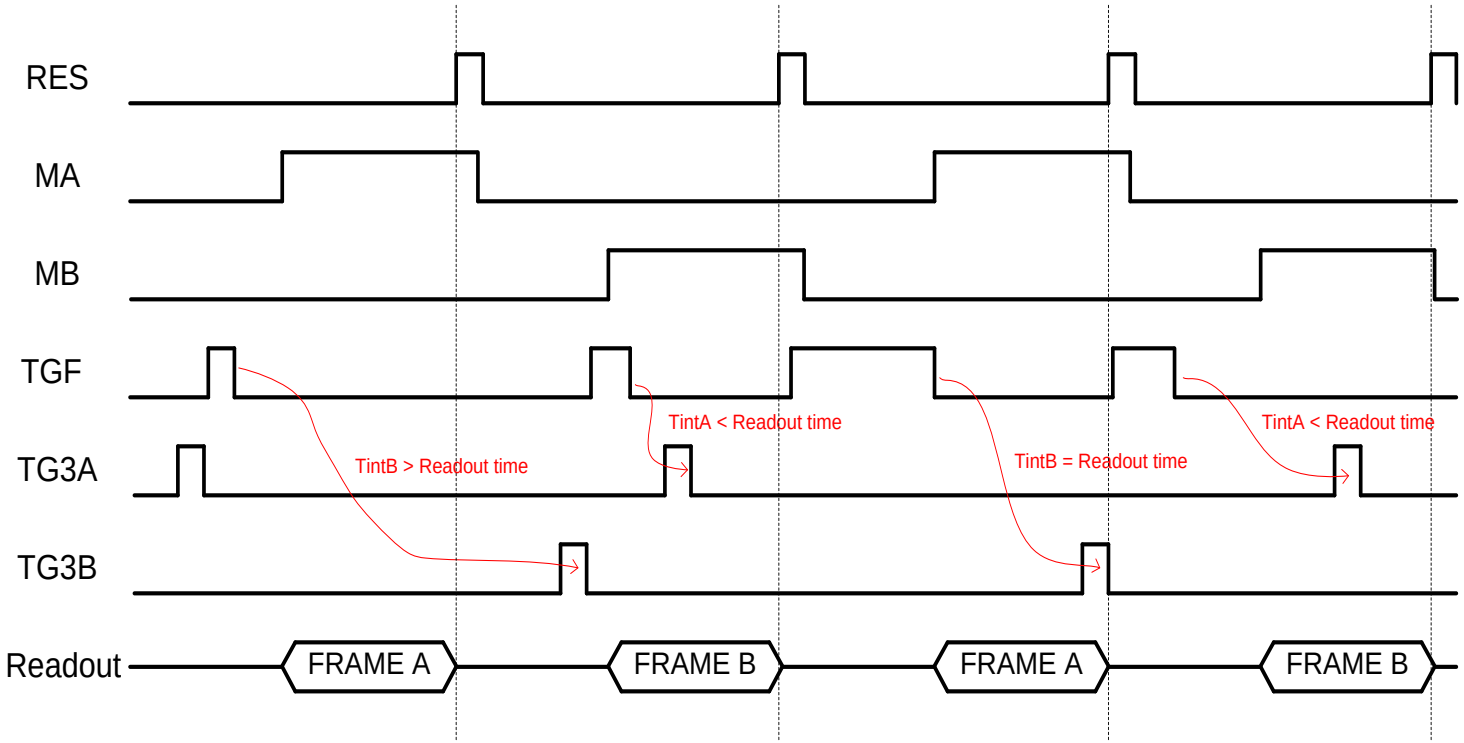

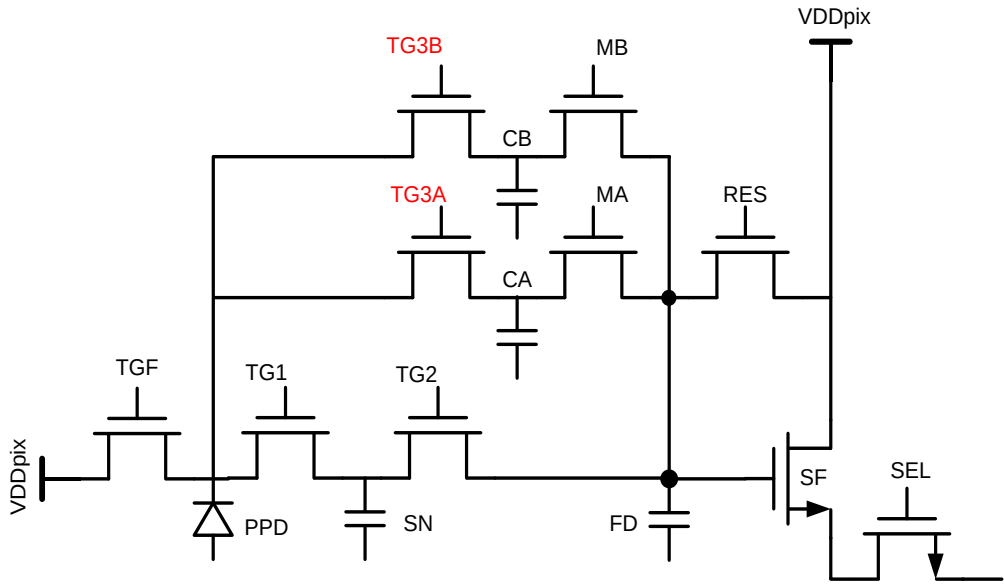

M. Inoue, Q. Gu, M. Jiang, T. Takaki, I. Ishii, K. Tajima "Motion-Blur-Free High-Speed Video Shooting Using a Resonant Mirror", Sensors, 2017

X4 Frame Rate

caeleste

A	B	A	B	A	B	A	B
C	D	C	D	C	D	C	D
B	A	B	A	B	A	B	A
D	C	D	C	D	C	D	C
A	B	A	B	A	B	A	B
C	D	C	D	C	D	C	D
B	A	B	A	B	A	B	A
D	C	D	C	D	C	D	C
A	B	A	B	A	B	A	B
C	D	C	D	C	D	C	D
B	A	B	A	B	A	B	A
D	C	D	C	D	C	D	C
A	B	A	B	A	B	A	B
C	D	C	D	C	D	C	D
B	A	B	A	B	A	B	A
D	C	D	C	D	C	D	C

- Pixel with same integration time are arranged in a staggered fashion
- Effective frame rate is increased by a factor of 4

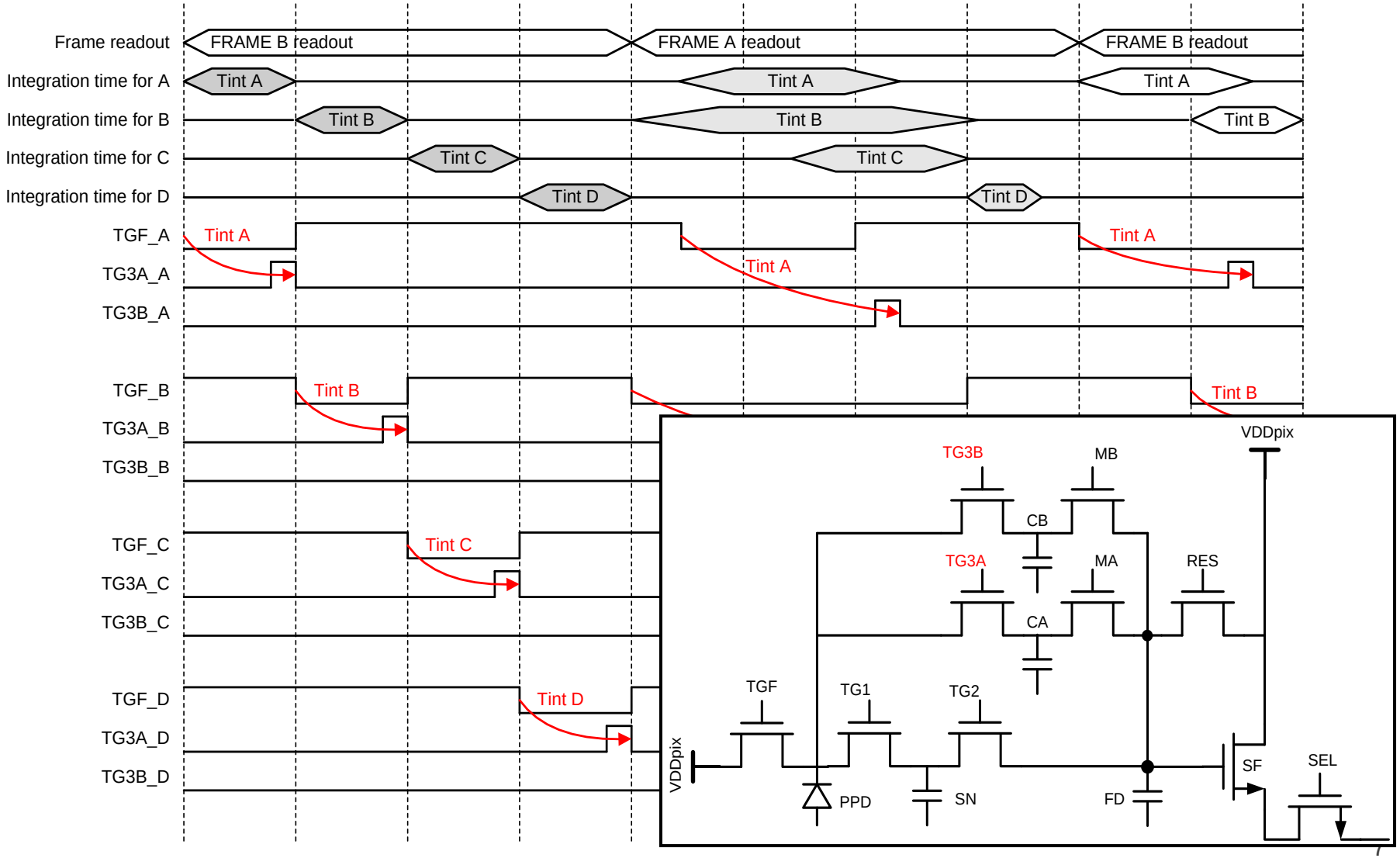

Sensor Performance

caeleste

Measured key performance parameters of the sensor	
Pixel array size	1280 x 1024
Pixel pitch	16µm
Frame rate (Full frame, HG only)	34,700fps
Frame rate of minimum ROI	2,000,000fps
Full well capacity (FD + CA/CB)	106.5ke-
Average Noise (CDS) @RT, S2D gain = 1	7.4e- RMS
Image lag @50% FW	< 1%
Linearity (0~90% FW)	< 1%
Power consumption	16.5W

Breaking glass at 33kfps

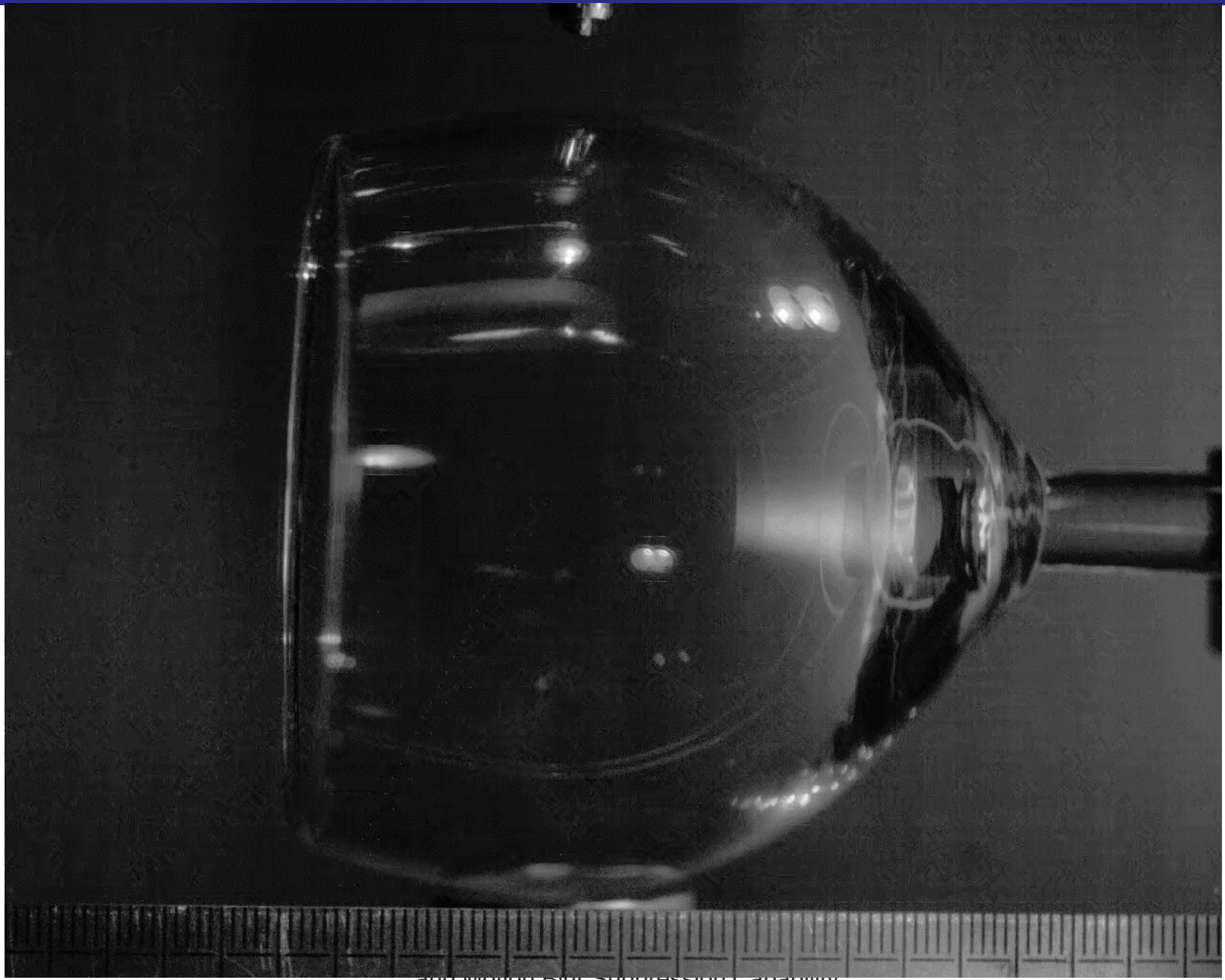

Breaking glass at 2Mfps (Minimum ROI)

caeleste

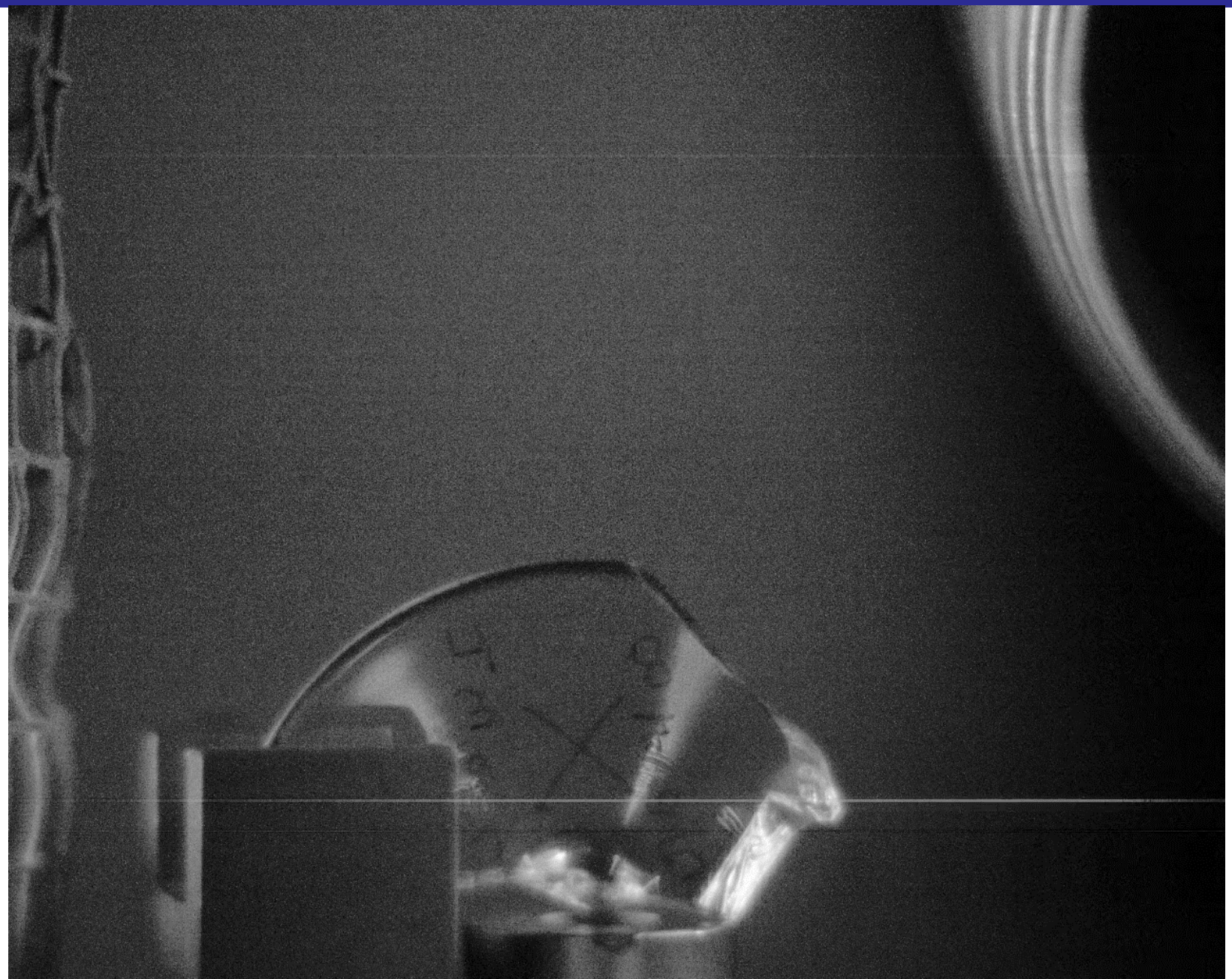

For more information or questions, please contact:

gaozhan.cai@caeleste.be

Scan the QR-code to visit our website:
www.caeleste.be

Acknowledgement
A part of this research was supported by Japan Science and Technology Agency (JST), Adaptable and Seamless Technology Transfer Program through Target-Driven R&D (A-STEP, No. AS2615002J).