caeleste

White paper

ELFIS
true HDR, GS, BSI, radhard imager

History record

20190403	B.Dierickx, A.Klekachev	creation
20190420	B.Dierickx	overall updates
20190426	B.Dierickx, A.Kalgi	updates on electrical performances
20190705	B.Dierickx, P.Stampoglis, A.Klekachev	HDR movie

References and other publications

- A.Kalgi & al. "European low flux CMOS image sensor", CNES workshop, Toulouse, November 2017
- US patent 9819882, Granted 20171114, “Global shutter high dynamic range sensor”.

White paper outline

1. Key features
2. HDR images
3. Measured performance
4. Datasheet

Appendix: HDR+GS operation

1.
Key features

justification

The ELFIS imager is the *first image sensor ever* combining following features

1. True HDR or “MAF HDR” (Motion Artifact Free High Dynamic Range)
2. IWR Global shutter using GS CMOS technology, which
   ⇒ Allows low noise readout by the use of CDS (correlated double sampling)
   ⇒ Enabling Global Shutter without dark current penalty
3. BSI (Backside illumination) realizing near 100% QE (quantum efficiency) x FF (fill factor)
4. TID (total ionizing dose) radiation hard design

It is developed under ESA contract 4000116089 “European Low Flux Image Sensor”, in collaboration with LFoundry (I) and Airbus (F)

Key specifications

Geometry

- ✓ 15µm pixel pitch
- ✓ 1920x1024 pixels
- ✓ Leftmost 16 columns are test pixels and reference pixels
- ✓ 16 parallel differential output channels
- ✓ BSI
- ✓ Stitching compatible design

Electrical performance

- ✓ 40MHz pixel rate per output channel
- ✓ 500mW at max speed

Electro-optical

- ✓ Q_{FW} 6000e and 160000e in IWR; 6000e and 320000e in ITR
- ✓ Q_{noise} $6.5e_{RMS}$ with in nominal operation
- ✓ Peak QE > 90%
- ✓ MTF >60% for thin layer BSI
- ✓ PLS >200:1 for thin layer BSI, > 500:1 for thick epi

ELFIS pixel

This is not the real radhard ELFIS pixel layout. It is a representative non-radhard variant.

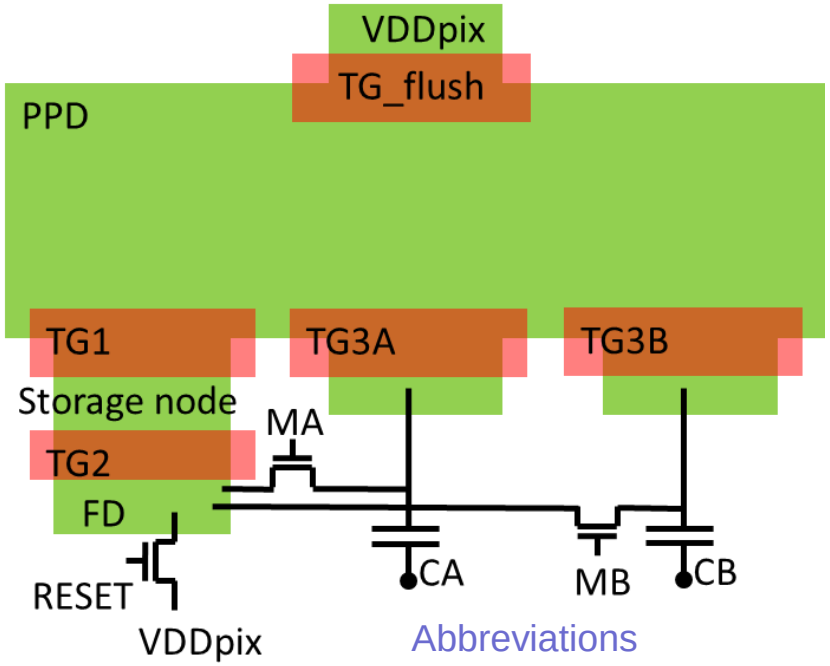

Abbreviations
PPD: pinned photodiode
SN: storage node
TG: transfer gate(s)
FD: floating diffusion
CN: capacitor node (CA, CB)
M: merge transistor (MA, MB)
VDDpix: pixel supply voltage

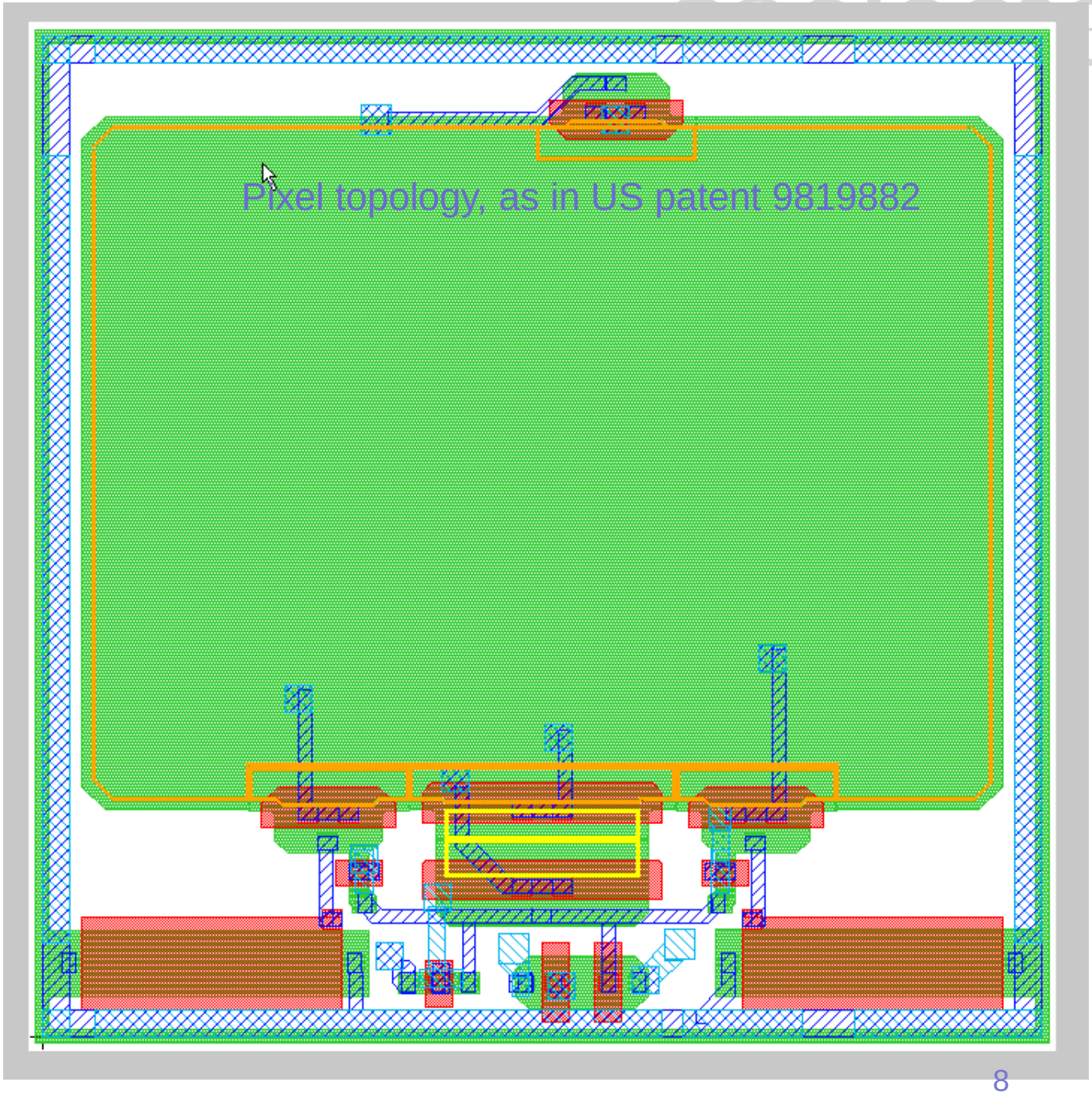

ELFIS PCB/CoB

This figure shows (a FSI = frontside-illuminated version of) the ELFIS on its characterization CoB (chip-on-board).

The PCB is goldplated for wire bonding and has no solder mask to avoid outgassing in the vacuum setup.
The only passives required are capacitors, for decoupling of the various voltage supplies and stabilization of the on-chip generated DC voltages.

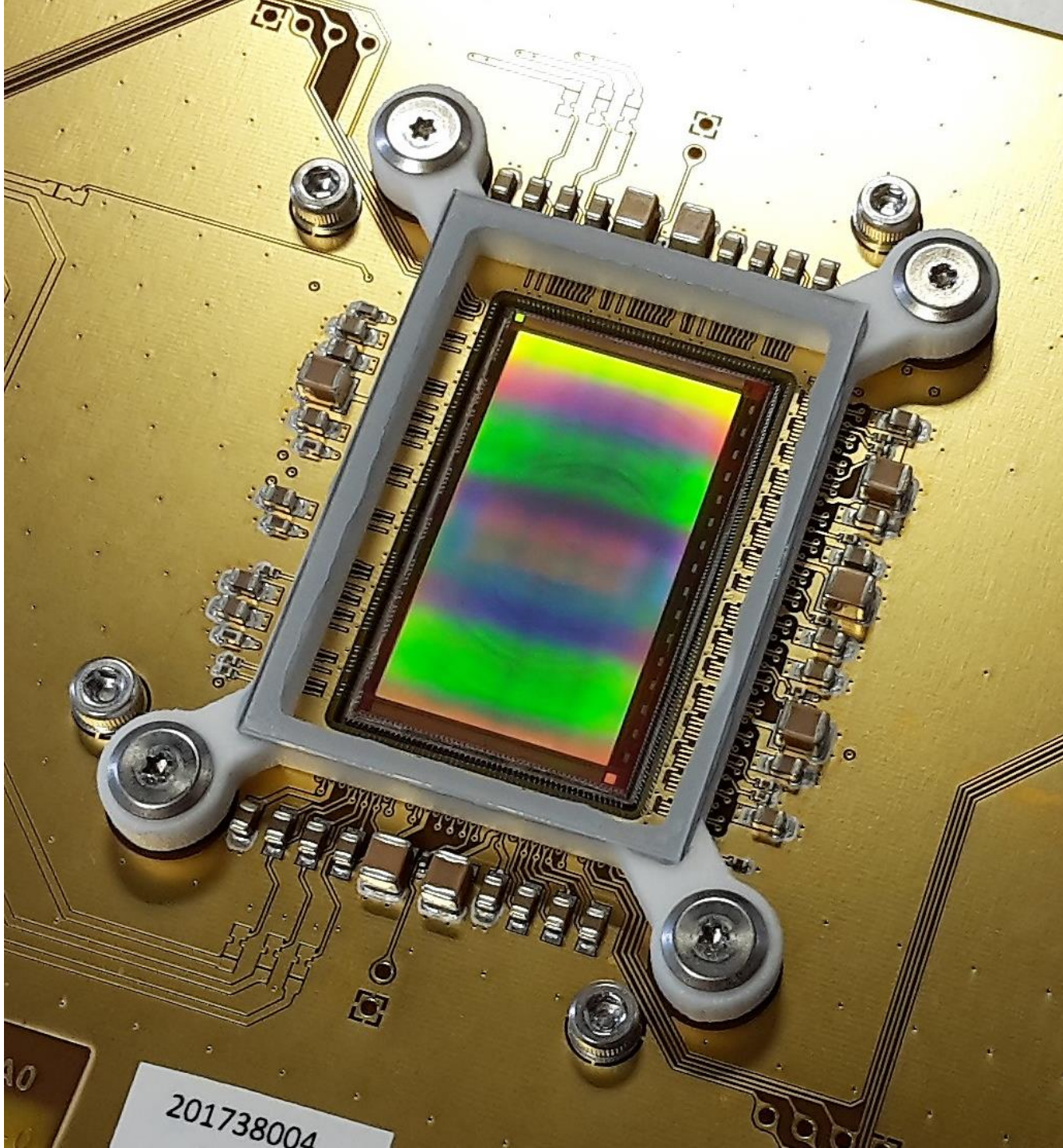

ELFIS photo response of HG and LG signals

caeleste

Raw data of both signal ranges

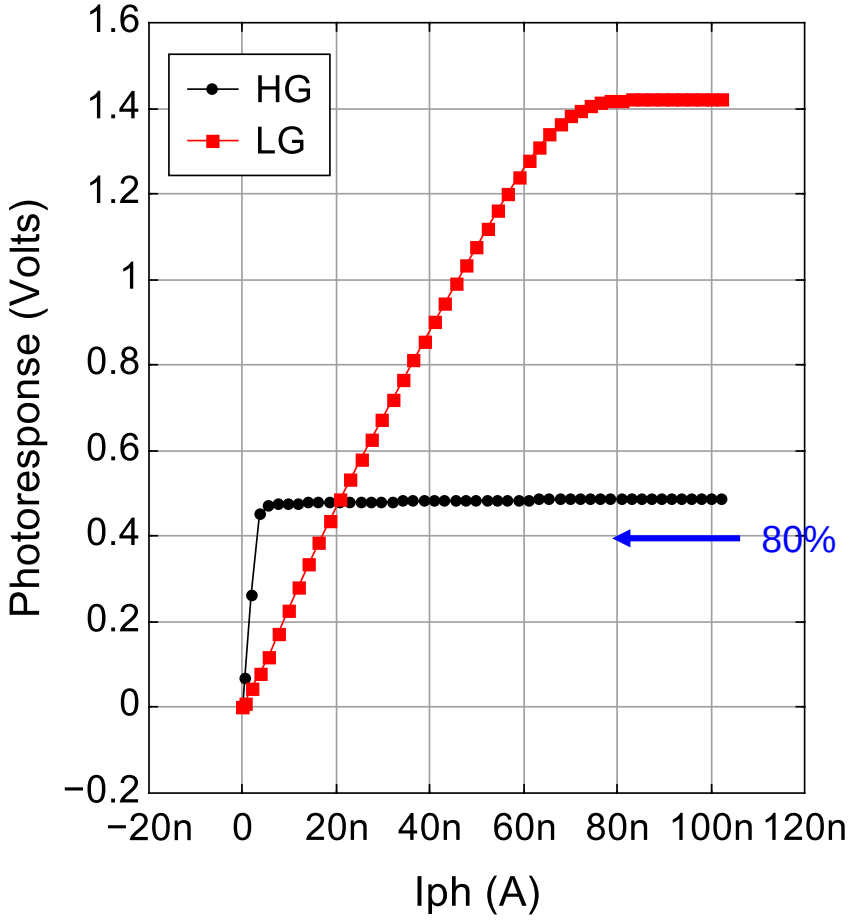

After applying a gain factor on the LG data

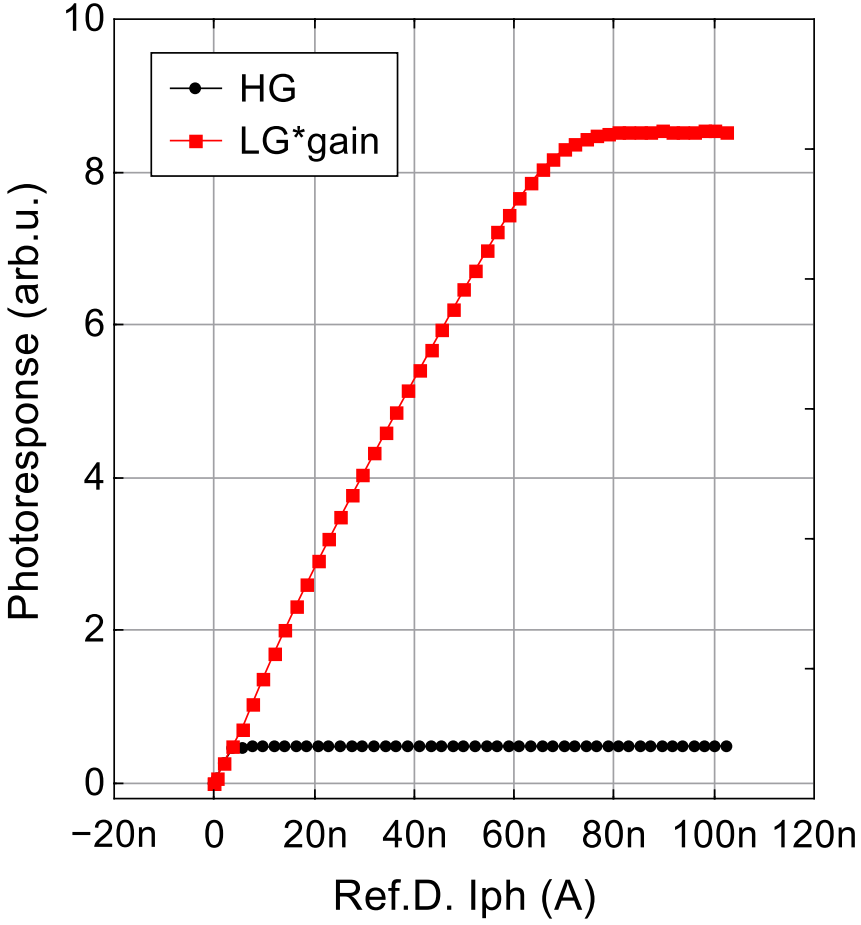

ELFIS pixels convert the integrated photocharge almost simultanously on two conversion capacitances, resulting in the simultaneous availability of a "high gain" and "low gain" signal. These are read out over the same channels time-multiplexed within the row time.

Some terminology

We call the high gain signal the "low Q_{FW} range", and the low gain signal the "high Q_{FW} range".

A "frame" is the collection of one signal for all pixels.

A "pass" is the time needed to readout one signal for all pixels.

2.
HDR images

Setup

We took the first HDR images from within out lab looking to sunlit buildings at the other side of the Michiel Coxystraat. The dark part of the scene consisted of a black PC keyboard, a spray can and a white coffee cup.

The Elfis PCB carries a black plastic lens mount with a Nikon 55mm lens, diaphragm set to 22 (! Indeed this 15µm BSI pixel is really light sensitive).

All images are taken in IWR (global shutter “integrate while read”), with $t_{frame} = t_{int} = 30ms$.

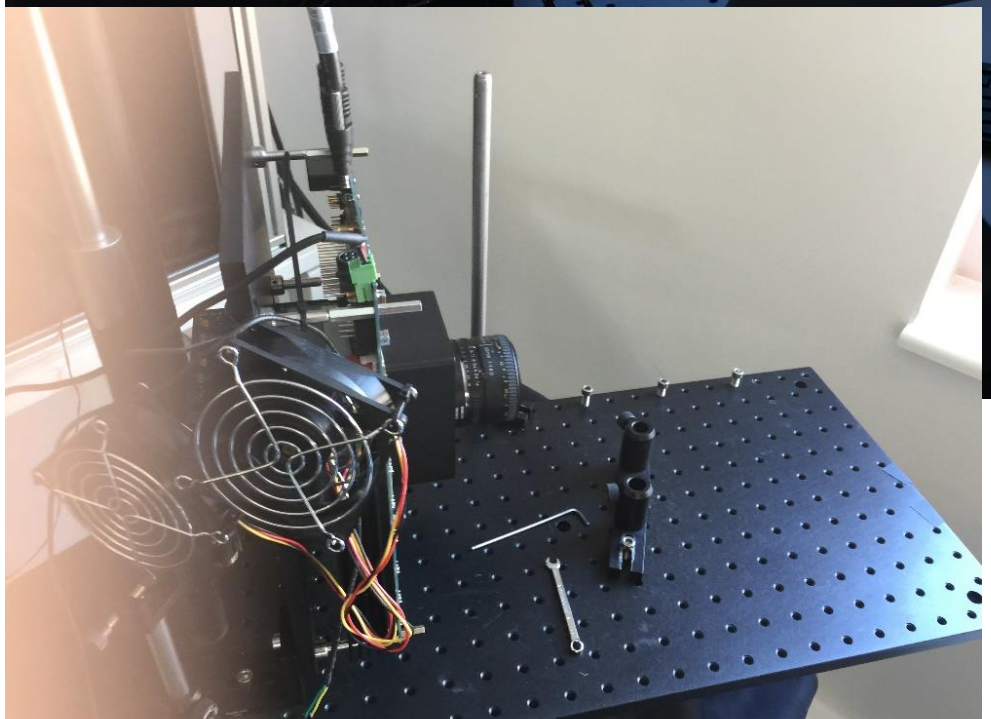

Processing the LG and HG (sub-)frames into a HDR frame

High gain (HG) sub-frame

Low gain (LG) sub-frame

Here we show the two simultanous frames of one image, being the HG and LG “sub-frames” of the same integrated photocharge.

Image processing done here:
In the HG sub-frame on-chip CDS and off-chip dark frame subtraction is done. In the LG sub-frame only dark frame subtraction is done.
No PRNU calibration, no linearity correction, no bad pixel or cosmetic corrections are executed.

The HDR frame is calculated pixel per pixel as follows:

→ If HG pixel value < 80% of saturation, use that HG value

→ Otherwise use LG * gain factor

For demonstration; smoother algorithms exist see further

Displaying the HDR frame

The resulting HDR image (HDR frame) is stored with 16 bit pixel values. However, when displaying it by truncation to 8 bit values, the dark parts of the resulting image display as very dark grey or black

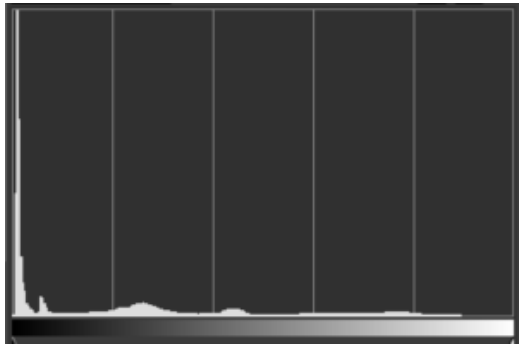

The “raw” HDR frame histogram

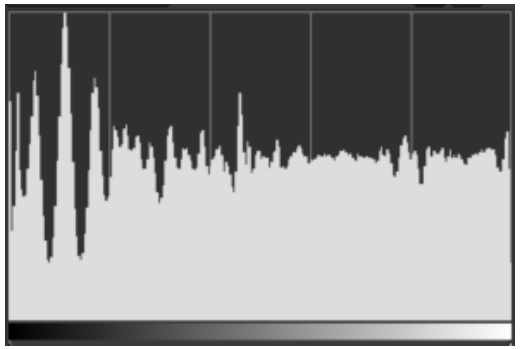

The “equalized” histogram

For *display purposes* one should enhance the contrast in the dark parts.
A popular image processing algorithm is *“histogram equilization”,* resulting in a +/- constant distribution of grey values over the image.

Better alternatives exist depending on the purpose and application.

Smooth merging of HG and LG

Just combining HG and LG frames at HG saturation results in a PR discontinuity at that point unless a very accurate PRNU calibration is done beforehand, even then leaving an increased noise at the cut point.

A better way to merge the HG and LG frames into a singe HDR frame is to use smooth interpolation, exemplified at the right.

Pixels with the HG signal above 75% of HG saturation take the LG signal (with PRNU calibrated gain factor).

Pixels below 50% of HG saturation take the HG value.

Between 50% and 75% one applies a weighted average.

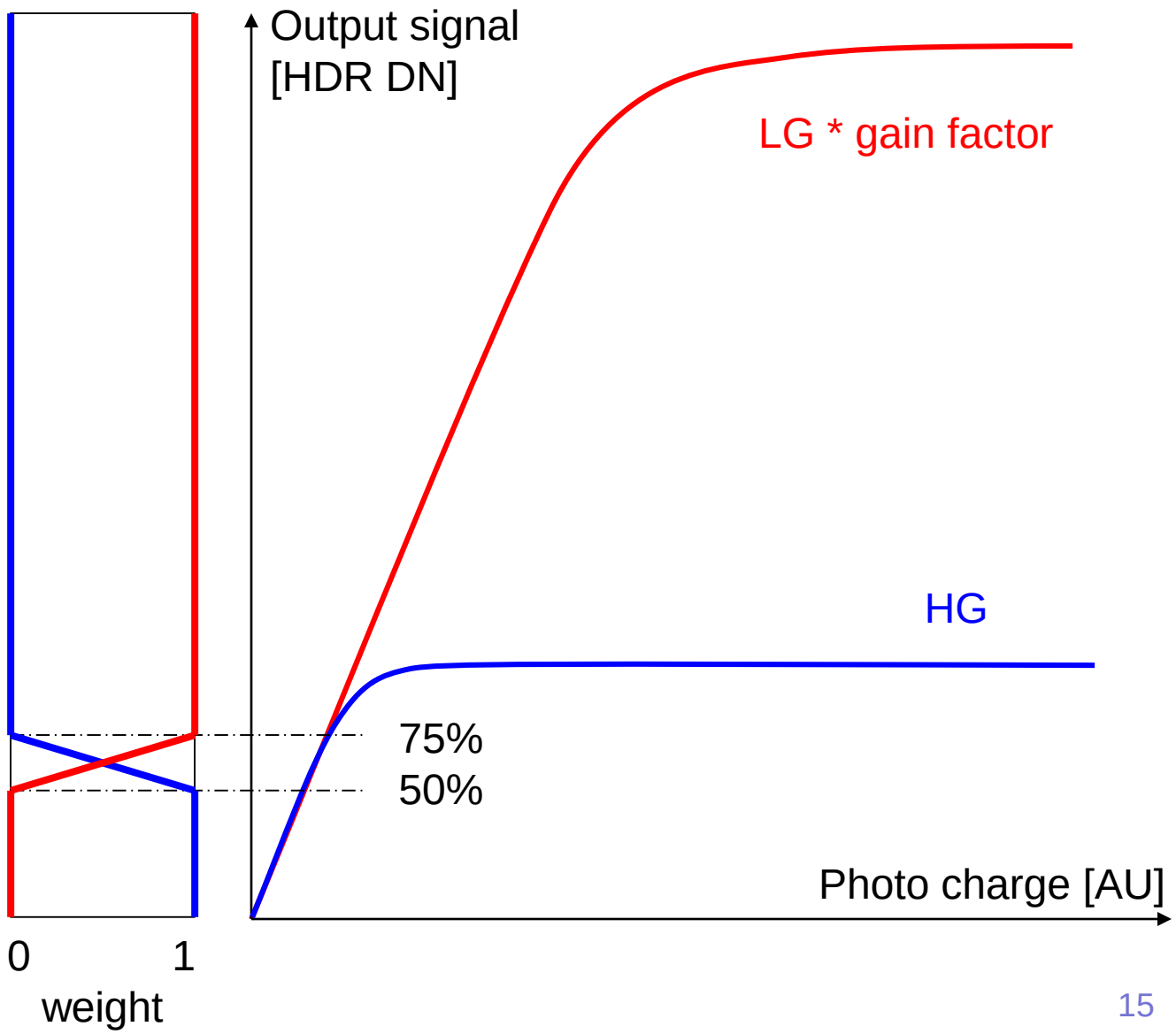

3.

HDR movie

See also https://www.youtube.com/watch?v=_SUg1v9ZSjI

This movie demonstrates HDR in combination with true global shutter: the rotating black ring “cuts through” the dark interior background as well as through the sunlit outside background. The motion blur is not affected by the local light intensity.

The two upper frames are the HG (high gain) and LG (low gain) sub-frames as recorded.

The bottom frame is the resulting HDR movie.

Other conditions:

- ✓ IWR $t_{frame}=t_{int}$ = 30ms thus f_{frame}=33Hz
- ✓ Looking through the lab’s window to sunlit buildings in the Michiel Coxystraat
- ✓ Nikon 28mm lens, diaphragm set to 22 (sic! this is a 15µm BSI pixel!)
- ✓ On-chip CDS and dark frame subtraction
- ✓ No PRNU correction, no linearization was done. Two defect rows were corrected
- ✓ The HDR image is created by a weighted interpolation between the HG and the LG frames
- ✓ The image is “histogram equalized” for display

appendix

HDR+GS pixel operation

HDR by combining two “normal” DR ranges

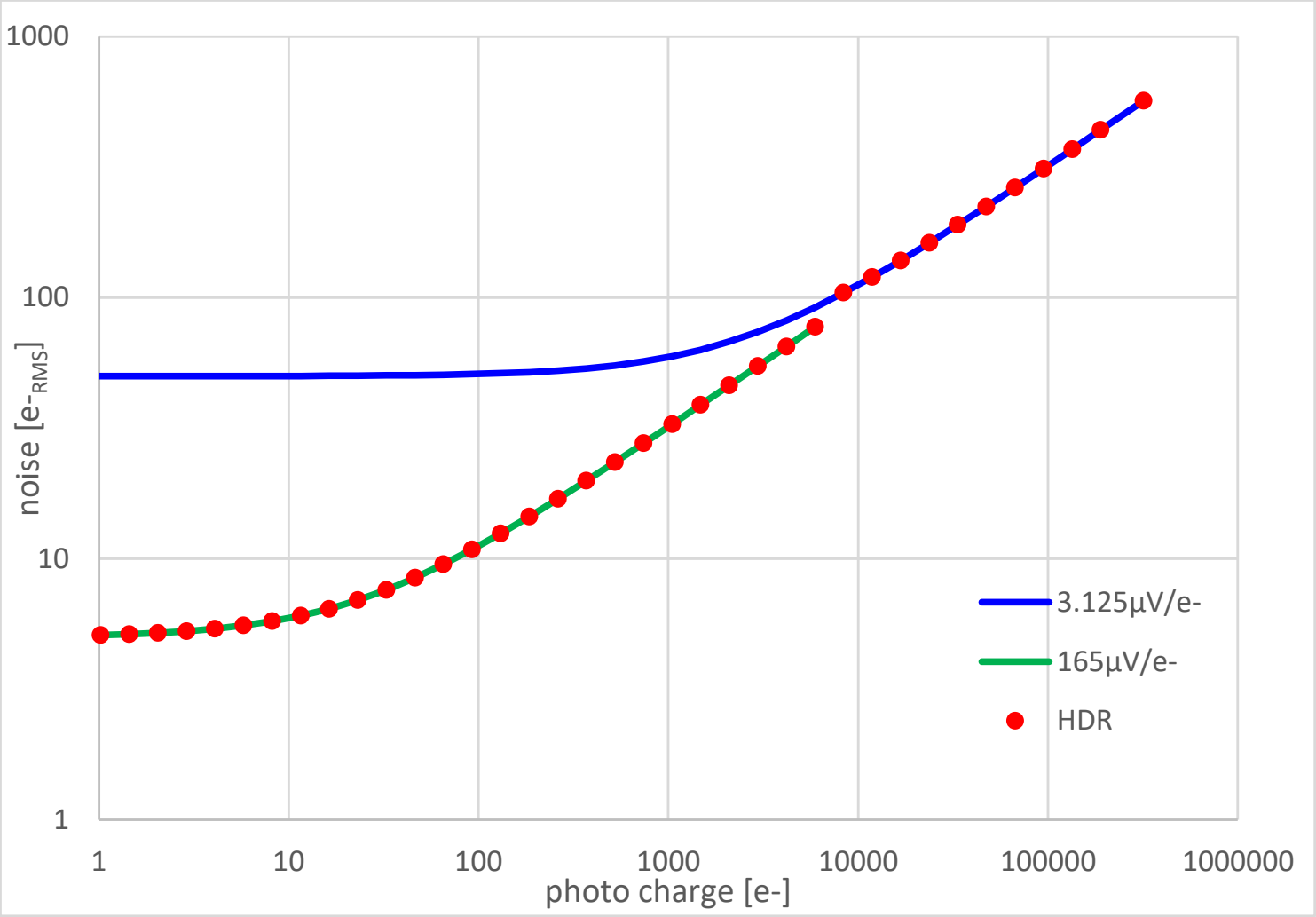

This graph is the “Noise versus Signal” relation of a two range image sensor pixel, i.c. the ELFIS pixel.
Each Q_{FW} range on its own has such relation. The dynamic range (DR) is defined as the ratio of the largest, near saturation, photocharge (Q_{FW}) and the noise equivalent photocharge (Q_{noise}) in the dark. When the two signals are combined into one “HDR” signal, it has such relation as well, and an overall dynamic range that is equal to the LG Q_{FW} divided by the HG Q_{noise}.

High Q_{FW} range:
DR=320000/50≈6400:1

Low Q_{FW} range:
DR=6000/5 ≈ 1200:1

Combination
DR=320000/5 ≈ 64000:1 or **96dB**

Operation of the ELFIS HDR+GS pixel, simplified

For the sake of clarity we explain the ELFIS pixel operation using a simplified version of its topology as shown at the right.
On the next slide we show a vertical cross section of this pixel along the red dashed line.
On the slides thereafter we show the potential diagram in the Silicon along the dashed red line, from FD to FD.

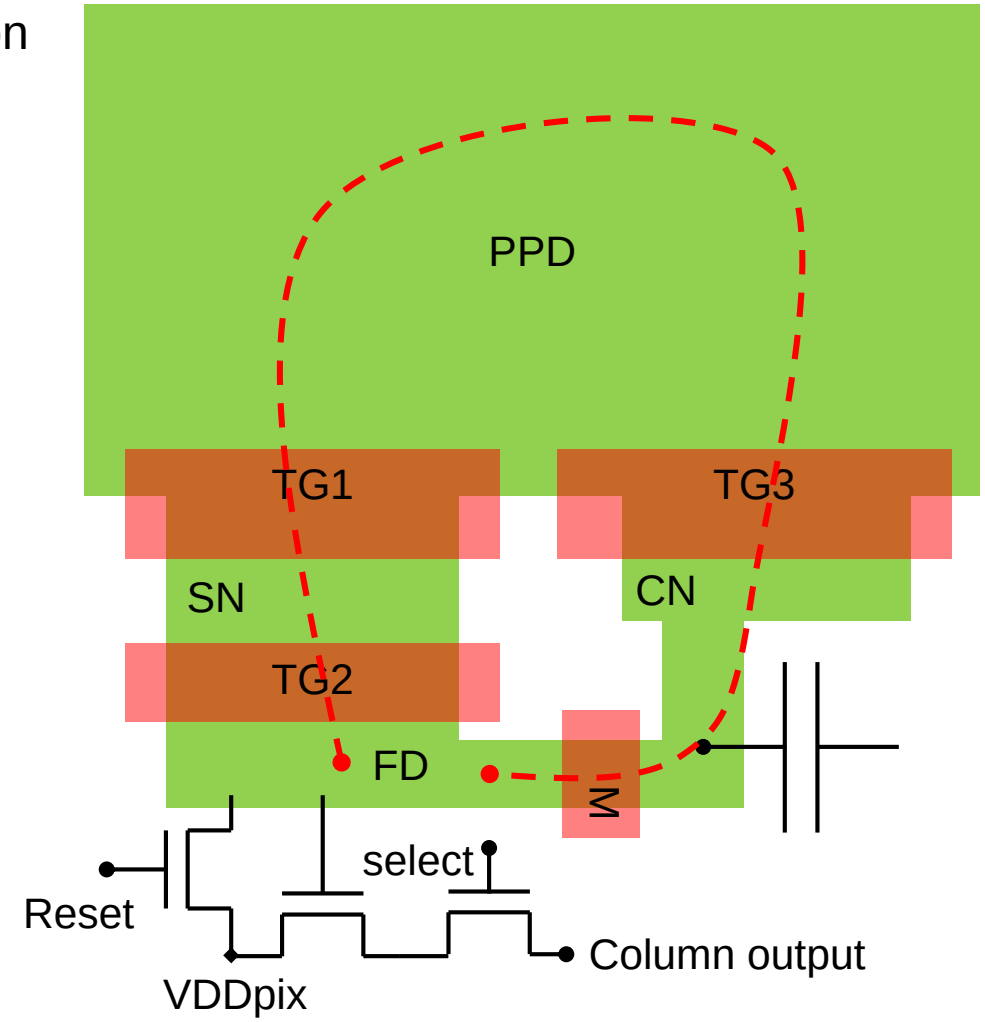

Abbreviations
PPD: pinned photodiode
SN: storage node
TG: transfer gate(s)
FD: floating diffusion
CN: capacitor node
M: merge transistor
VDDpix: pixel supply voltage

Cross-section along the red line

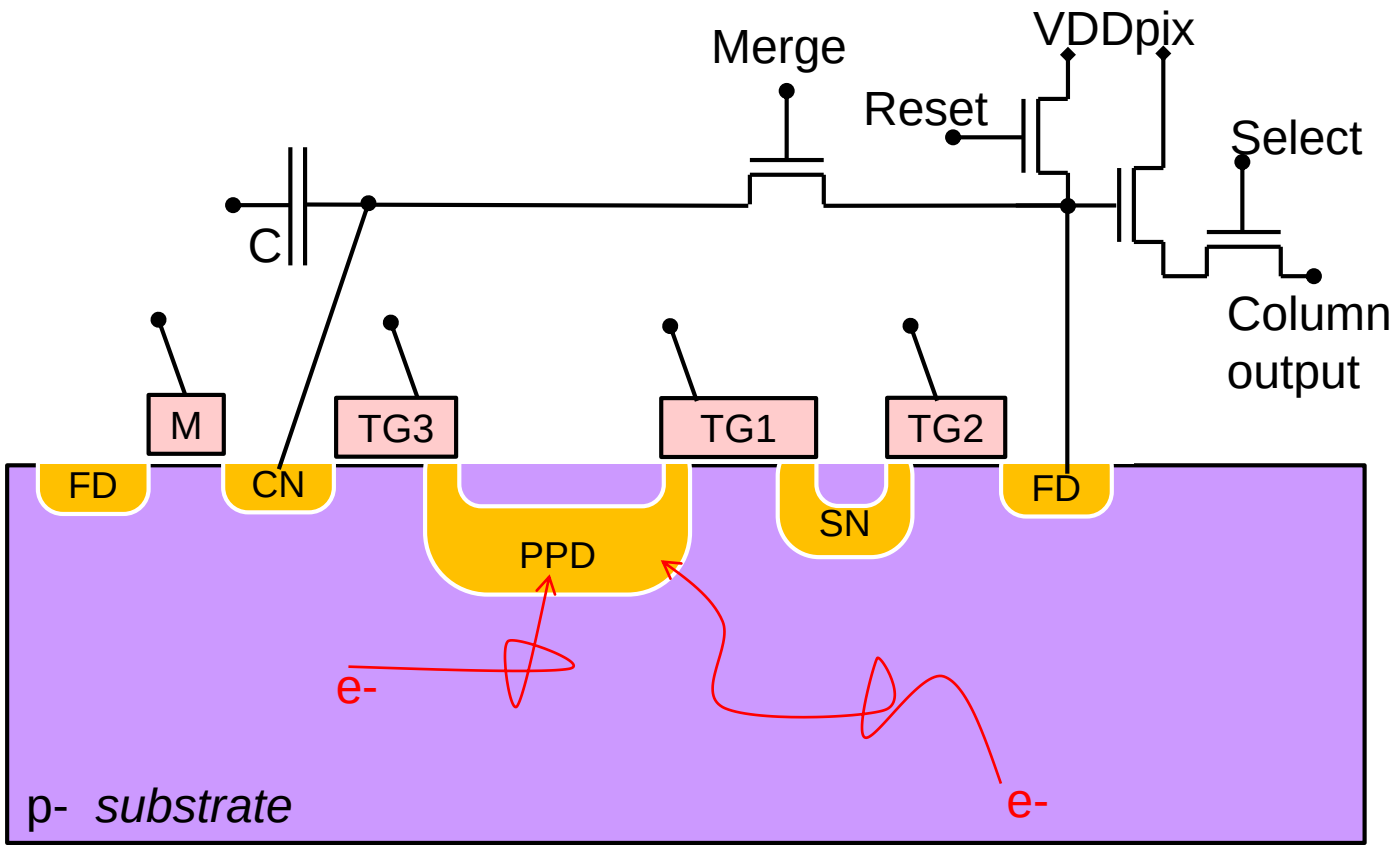

(remark that the FD node appears twice in this drawing)

Photo-electrons generated in the Silicon are collected in the PPD during the "integration time" t_{int}.
If the amount of integrated charge is below the maximum charge handling capacity of the PPD, it will be stored there (colored blue in the next slides).
If the amount of charge exceeds that maximum amount (colored red in the next slides), it will overflow over TG3 in to the capacitor C, where it is stored for later readout.

During integration photocharge is accumulated in the photodiode.
The TG3 gate voltage is set to the intermediate “overflow barrier” operation point.
When the photodiode is too full, charge overflows to the capacitor node
blue: charge fitting in the PPD
red: charge overflowing into the capacitor node.

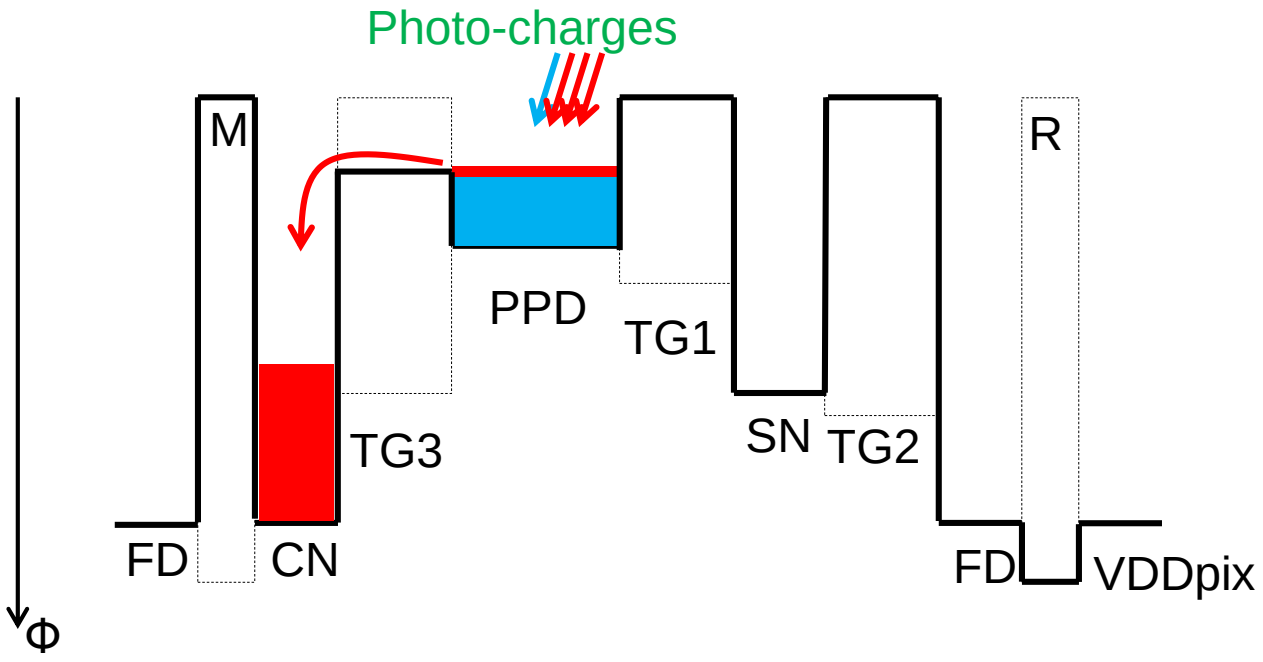

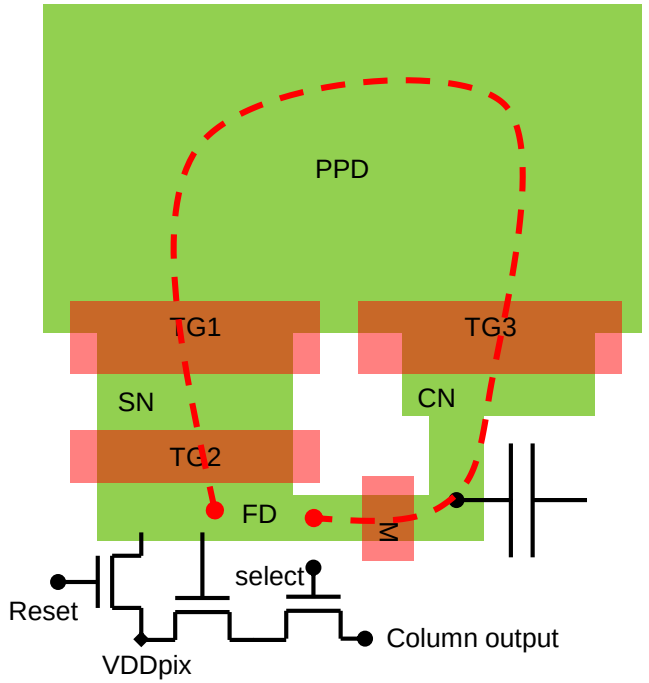

End of integration time:
1) stop overflow over TG3
2) transfer PPD (blue) charge to the SN using TG1

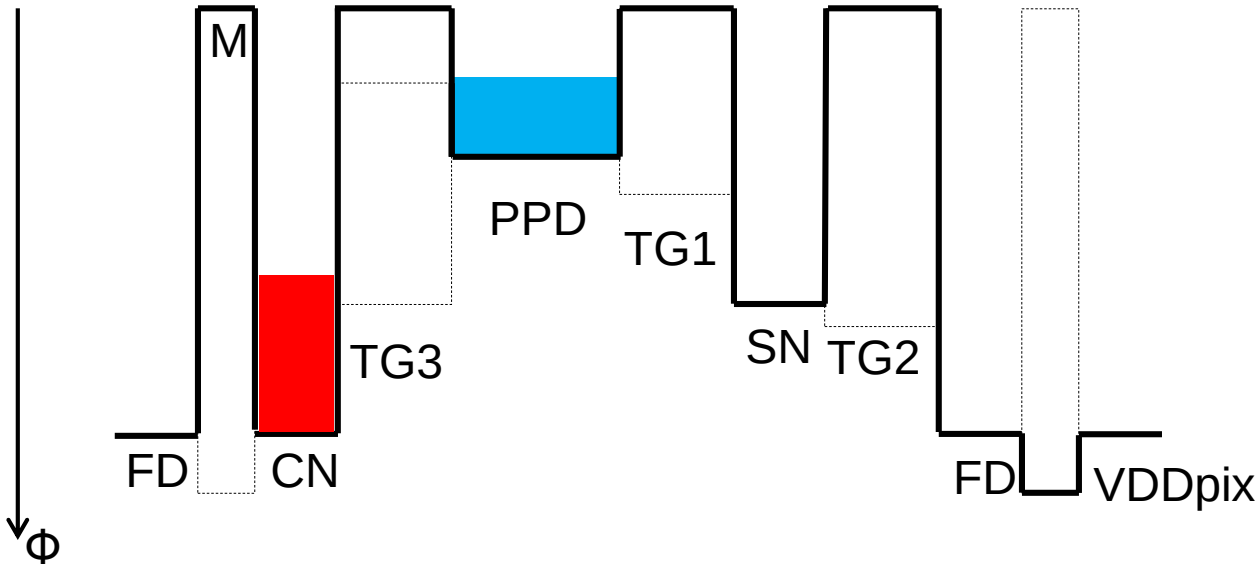

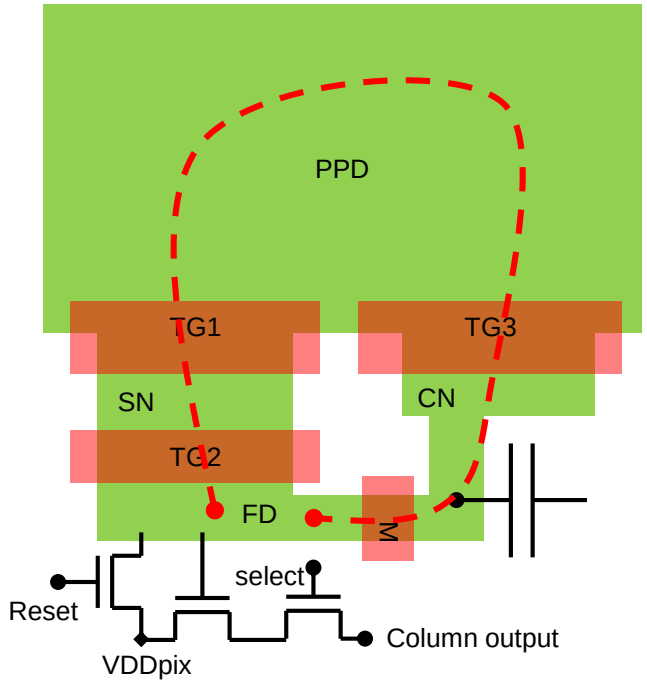

End of integration time:
1) stop overflow over TG3
2) transfer PPD (blue) charge to the SN using TG1

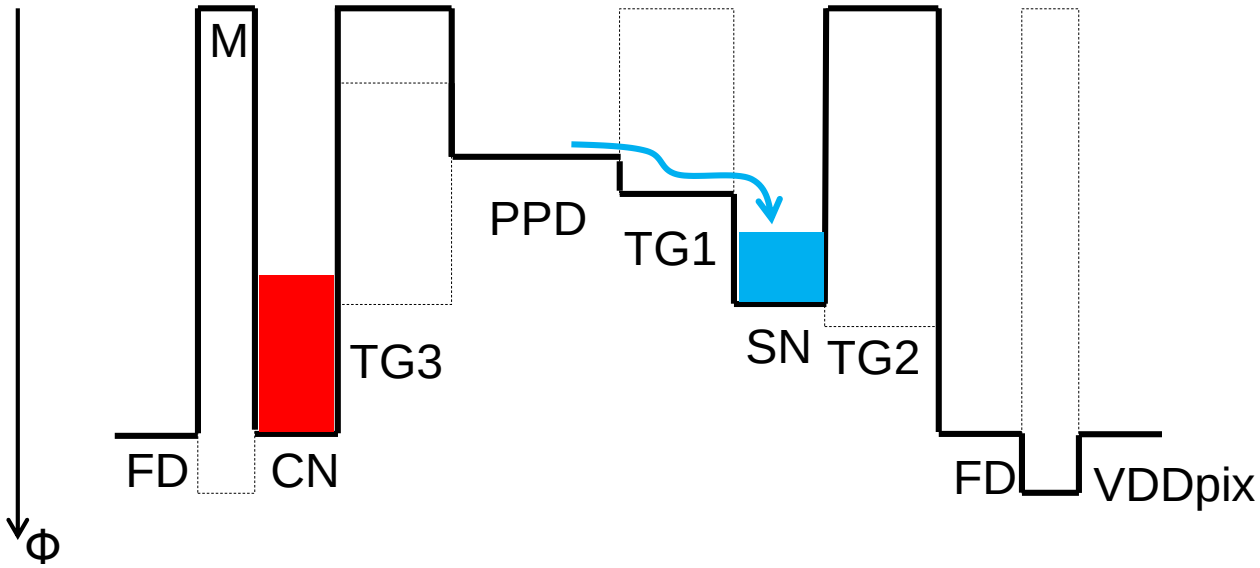

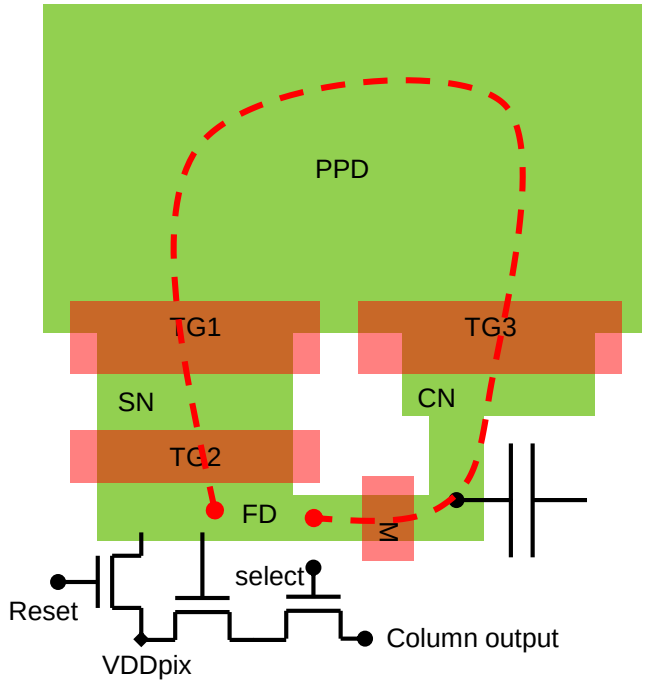

Turn TG1 off again

in principle the next t_{int} can start now.

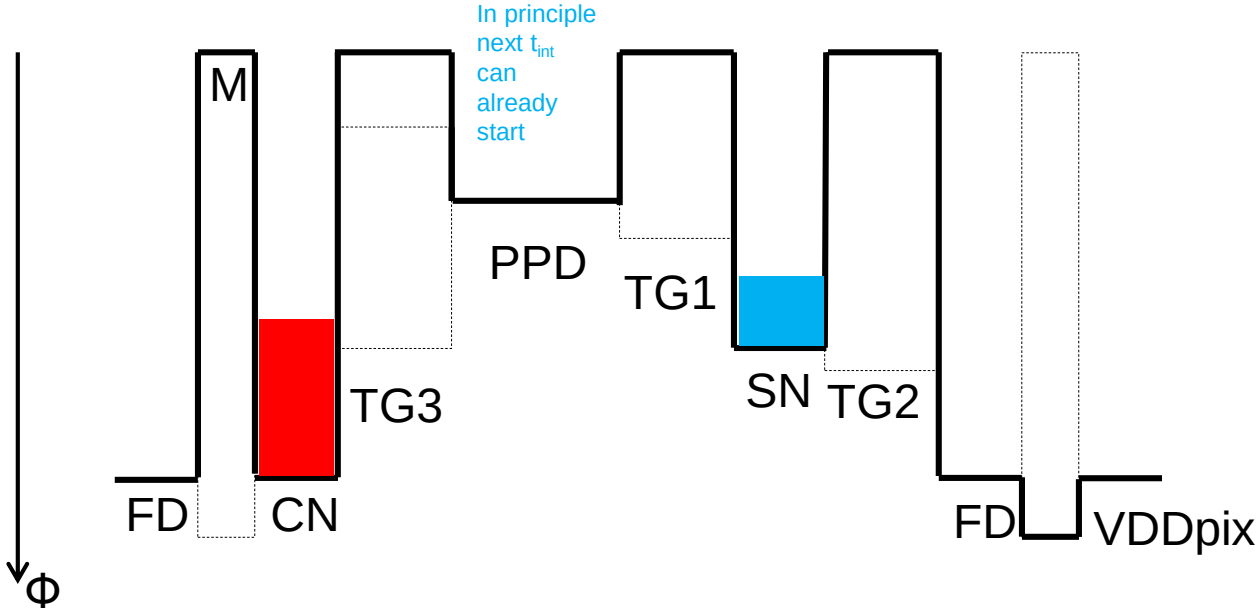

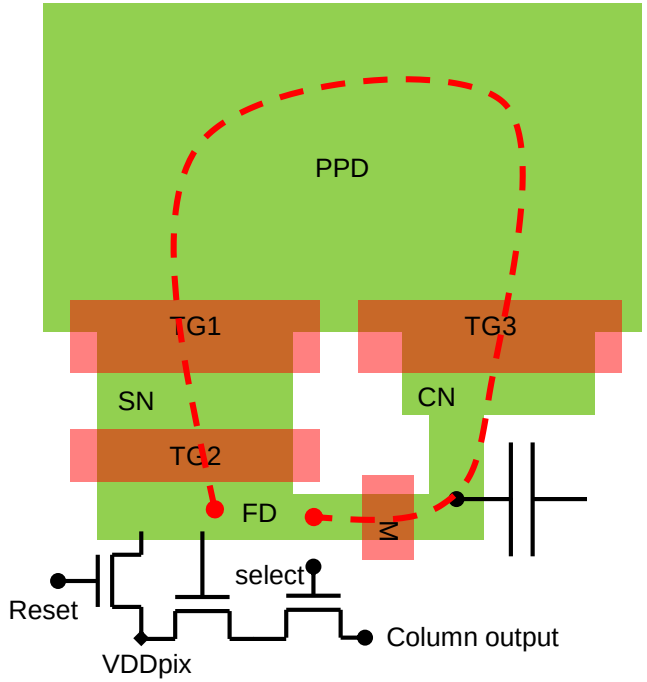

As the photocharge of the previous integration time is now in available in the SN and the CN, if can be read out. The readout of the imager happens row-by-row or in “rolling readout”. The select transistors of the rows to be read out are activated, the reset transistors are turned off, and then three voltage levels are put on the column bus: “R1”, “S1” and “S2”.
“R1” is reset level as present on the FD immediatedly after releasign the reset.

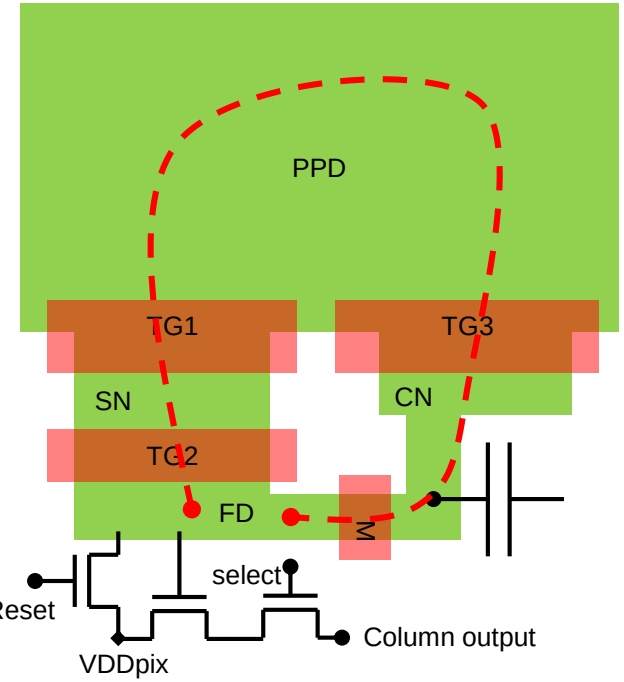

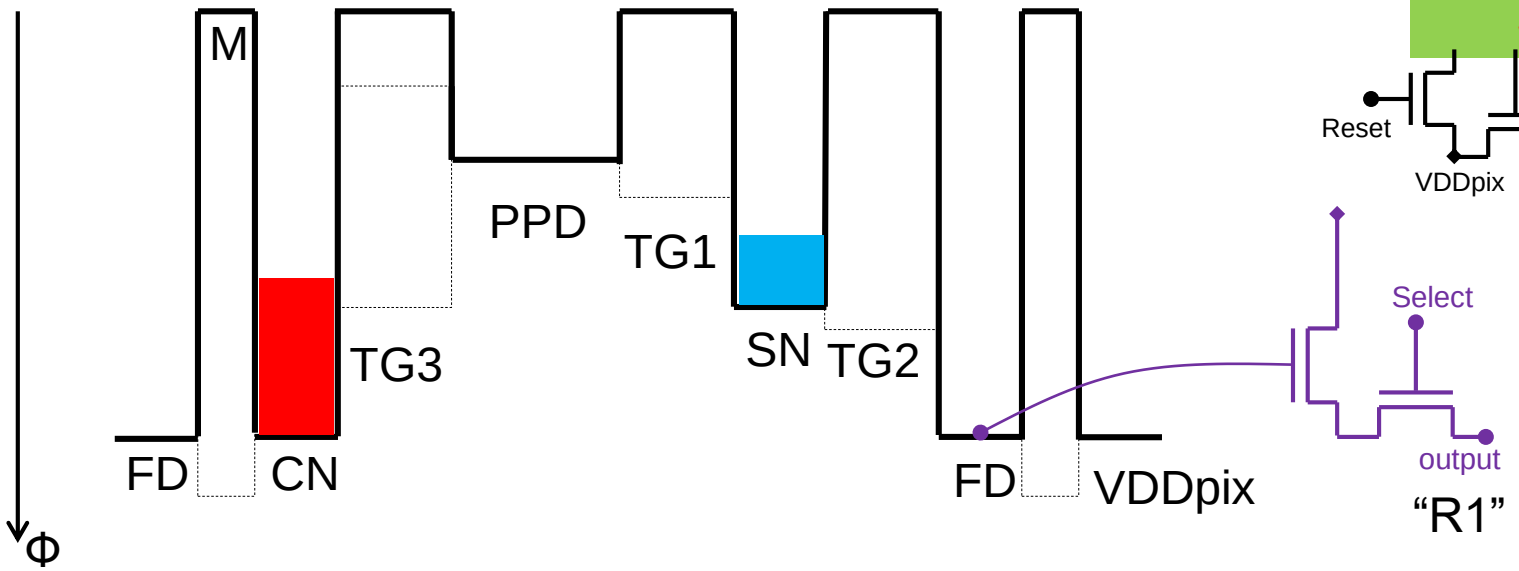

Then the gate TG2 toggled off-on-off, allowing the charge in the SN to transfer to the FD.
This is the “S1” signal level, representing the “blue” charge.

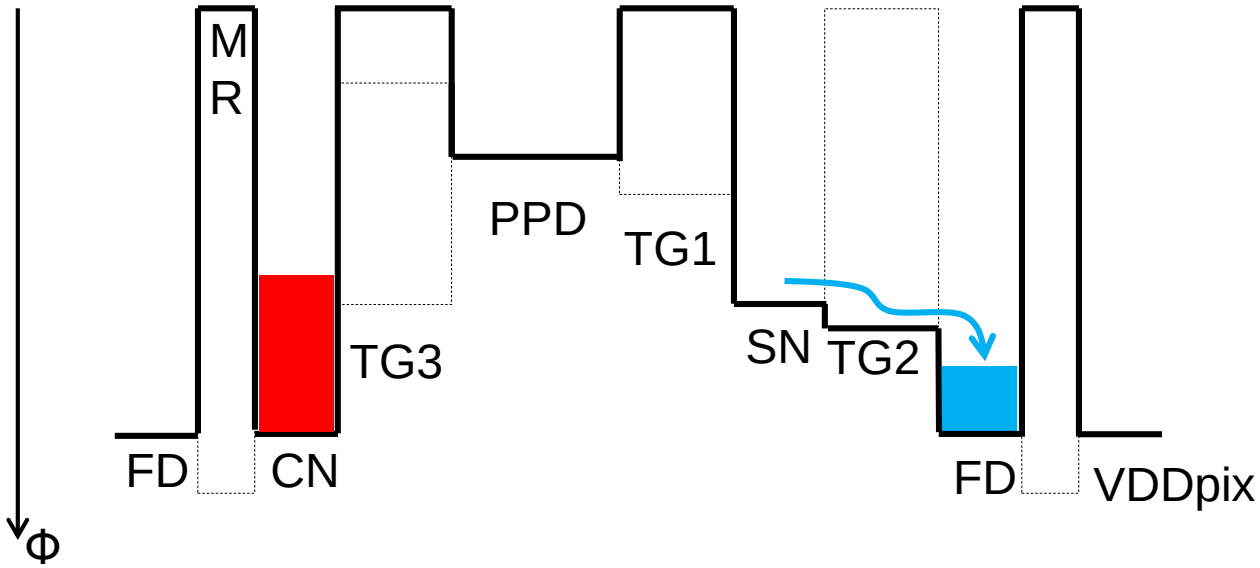

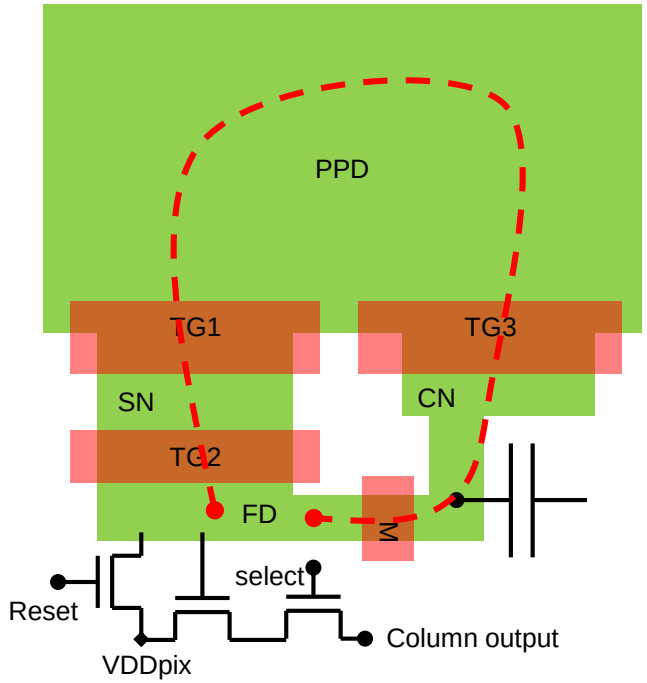

This is the “S1” signal level, representing the “blue” charge.
In the ELFIS imager, “R1” and “S1” are output as a combined differential signal (S1-R1) & (R1-S1). In this way we perform “CDS” (correlated double sampling), a technique that cancels the FD’s kTC noise and reduces the FPN (fixed pattern noise).

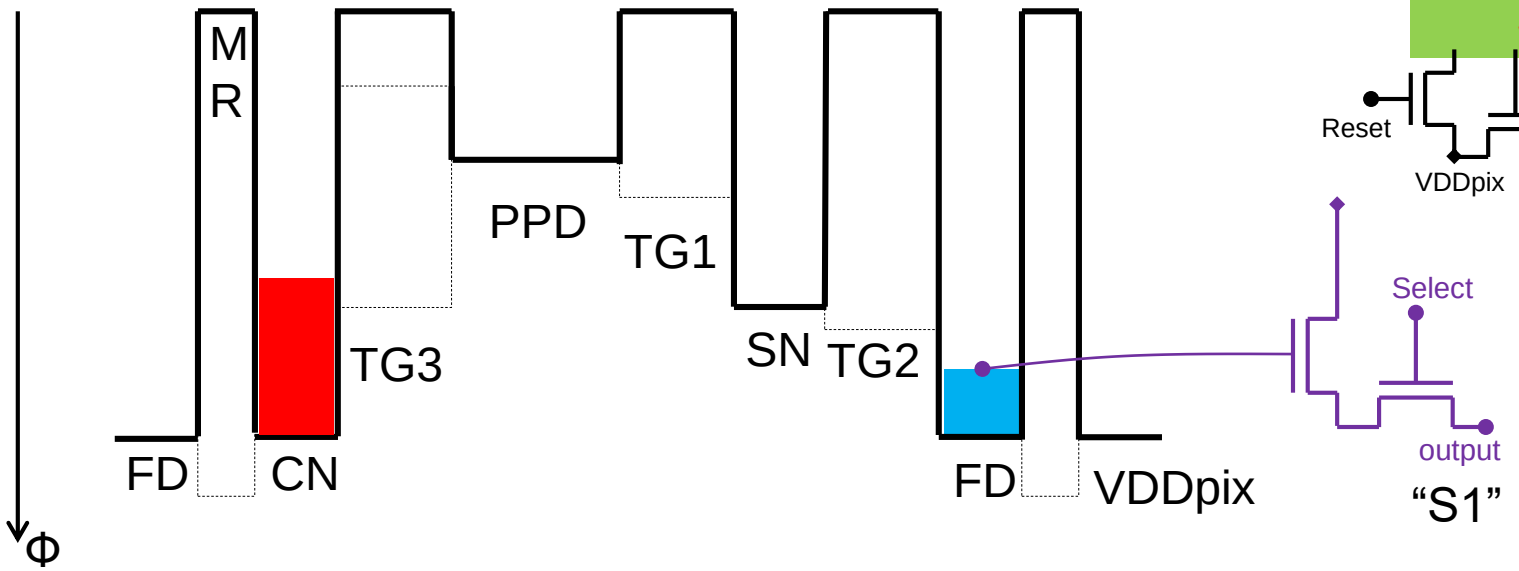

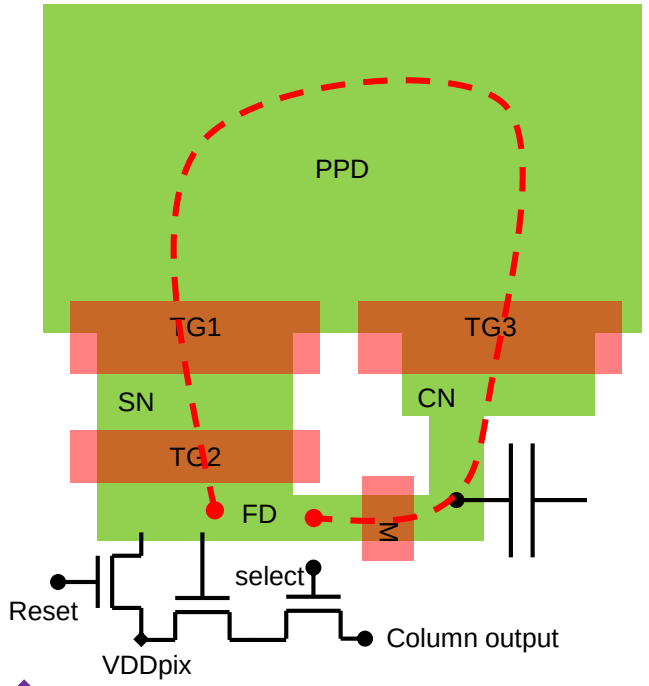

Then the Merge transistor is closed, shunting the FD and the CN. All photocharge, previously divided over the SN (blue) and the CN (red) is now reunited.
This signal is “S2”, being the LG or high Q_{FW} signal level. We do not apply CDS on S2; still S2 is readout differentially as (S2-ref)&(ref-S2).

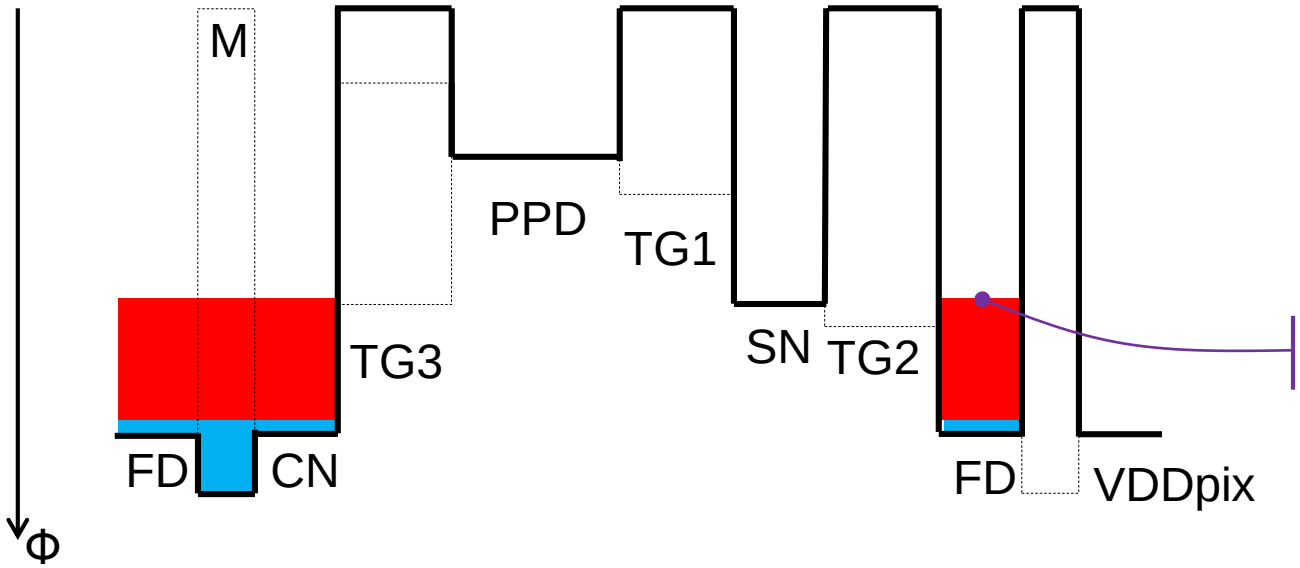

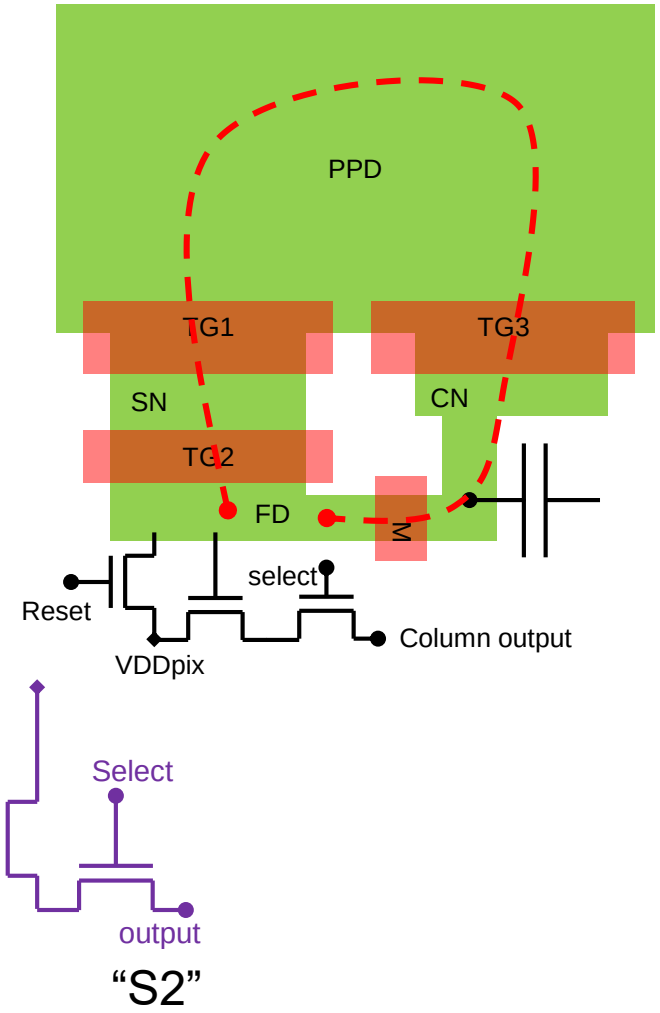

After the readout, FD, SN and CN are reset, i.e. emptied and ready for a next readout cycle.
Note that the PPD was already empty or flushed before and has started a new integration cycle.

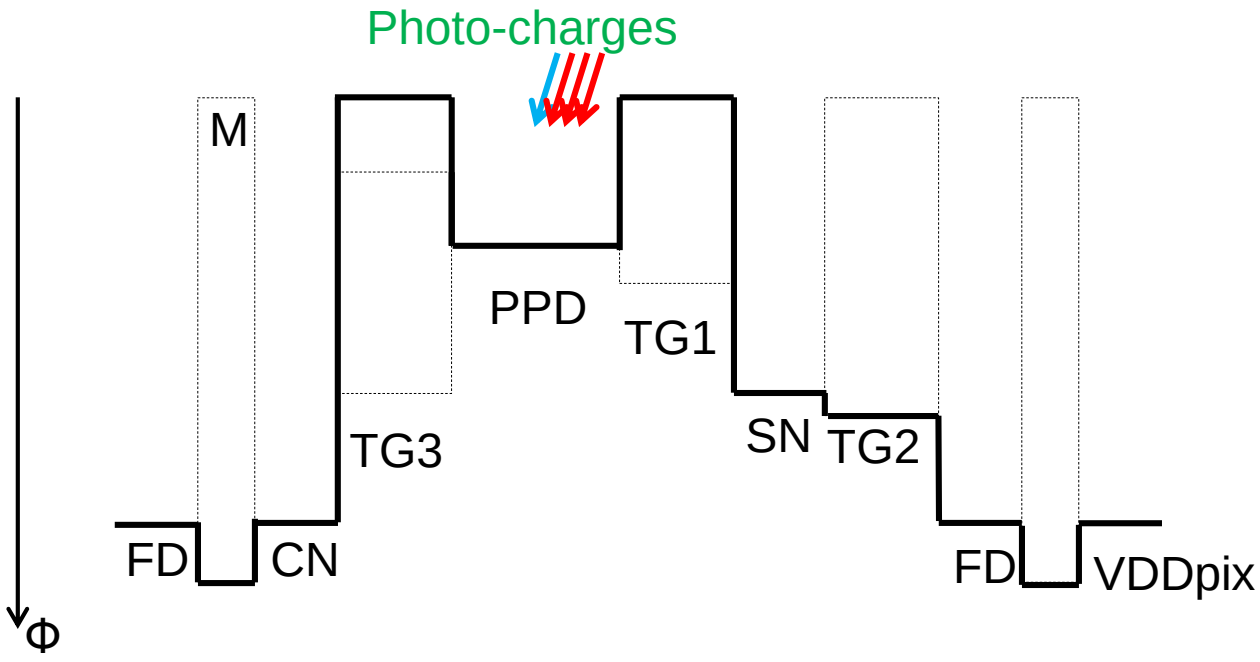

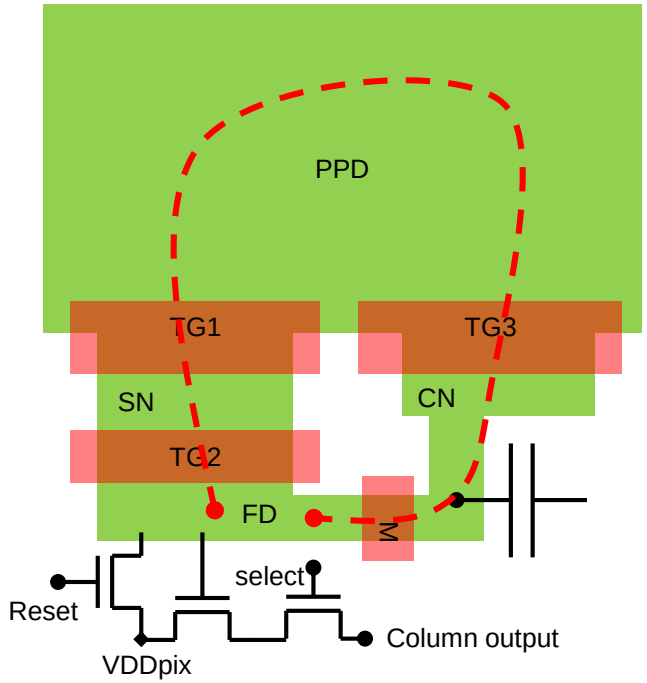

The operation of the pixel is closed. We are now back at the initial state where photocharge is integrate in the PPD; and where overflow charge is allowed to overflow to the CN.

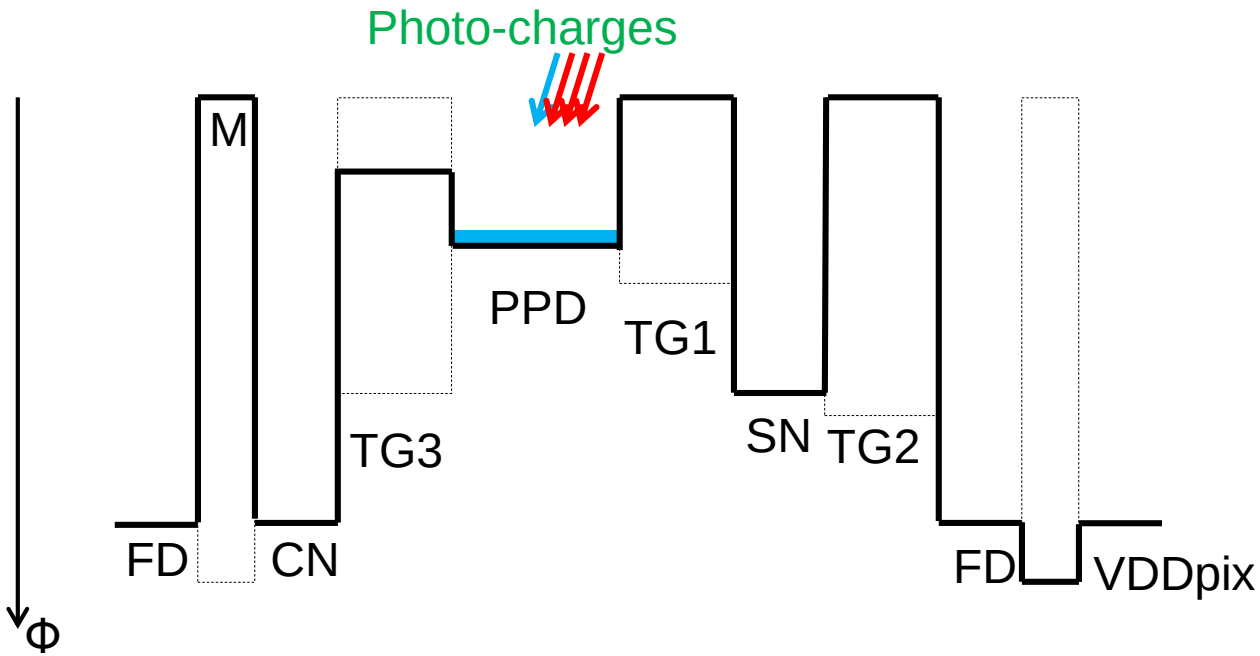

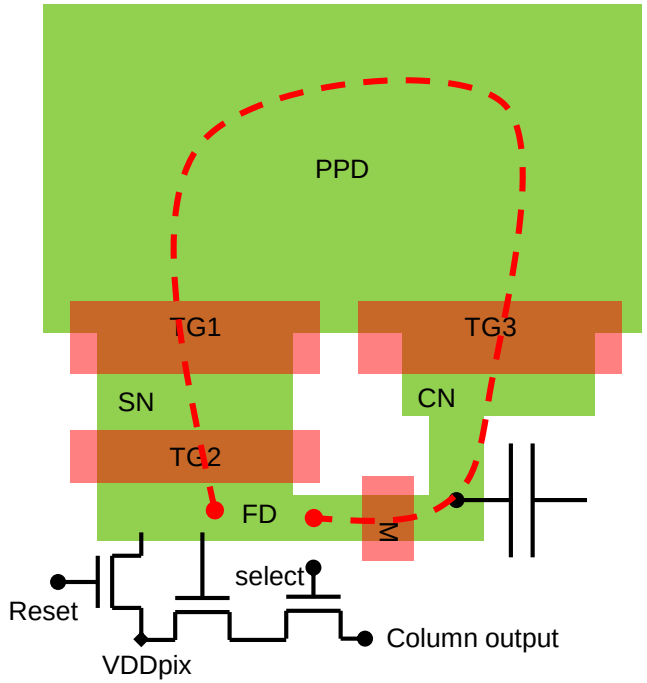

The real ELFIS pixel is more complicated. It has two sets of TG3, CN and M. Such allows true "IWR" (integrate while read). Off and even frames store their overflow charges alternatingly on one of the two CNs.