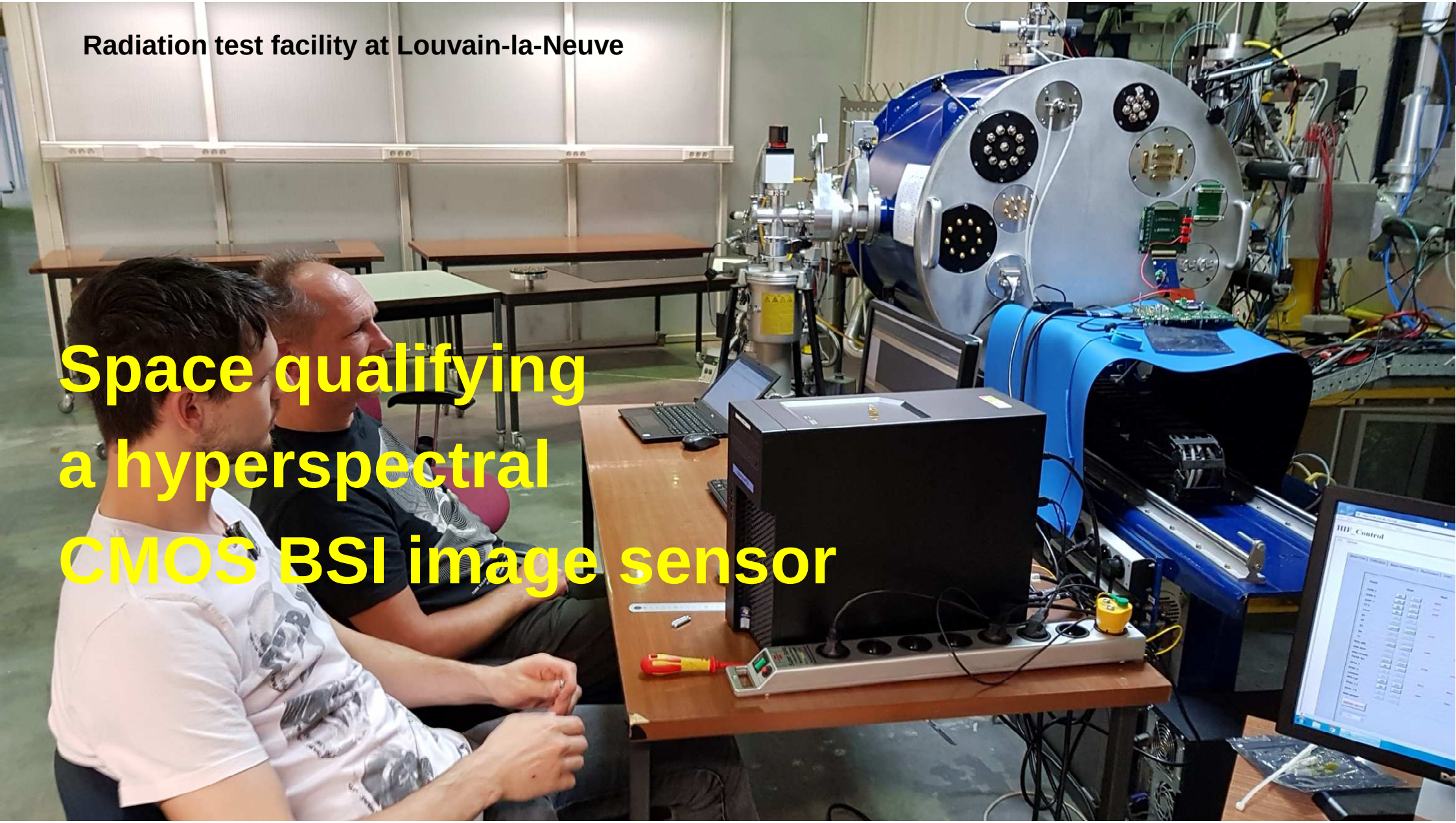
Radiation test facility at Louvain-la-Neuve
Space qualifying
a hyperspectral
CMOS BSI image sensor

Space qualifying a hyperspectral CMOS BSI image sensor

Space and scientific CMOS image sensors workshop
Toulouse
27 November 2019

D. Gautam[1], Q. Yao[1], D. Van Aken[1], B. Dierickx[1], J. Basteleus[1], J. Vande Velde[1], B. Luyssaert[1], W. Wang[1], D. Uwaerts[1], W. Verbruggen[1], K. Liekens[1], G. Cai[1], A. Brunetti[1], K. Minoglou[2], S. Santandrea[2], A. Bourdoux[3], D. Baudoux[3] ,V. Moreau[4], J. Nuttin[5] , G. Habay[5] , E. Callut[5]

Caeleste[1], ESA[2], Spacebel[3], AMOS[4], Deltatec[5]

Outline

caeleste

1. **Sensor description**
2. **Qualification of the device, analog path, key pixel features and measured specifications**
3. **On the activity of space qualification**
   - Overview & main results
   - TID results
   - SEU under heavy ions
   - Proton resilience
4. **Conclusions**

ELOIS is a Hyperspectral imager

caeleste

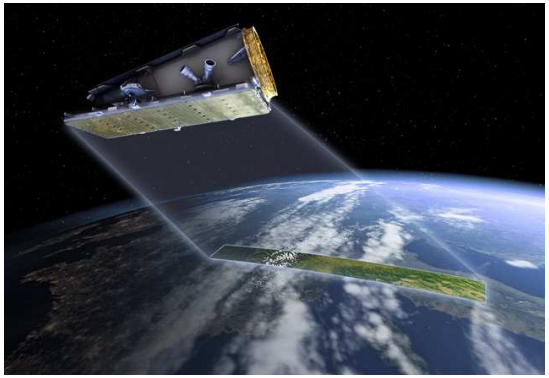

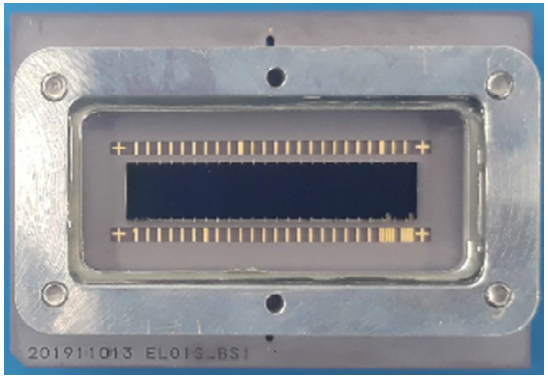

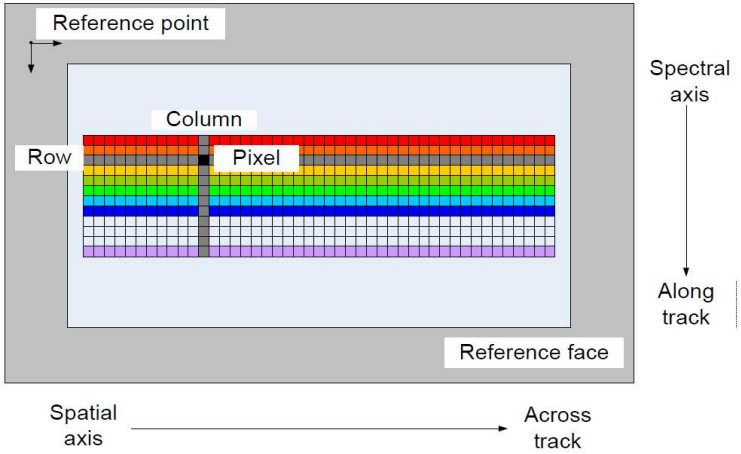

"Enhanced Light Offner Image Sensor"

- 2048 x 272 pixels
- 15.5um pixel
- Rad-hard design: TID, SEU, SEL
- 4x1 binning in Y-direction with proton resilience
- BSI
- Global shutter (RWI) and Rolling shutter operation
- Frame rate 50fps nominal, 200fps binned

- QE > 90% in the range 490 – 660 nm
- Dark current ~ 50 e^-/s @ room temperature
- Maximum FWC ~ 1200 ke-
- Read noise of 9.3 e- in high gain mode
- MTF > 0.57 for the range 465 – 830 nm
- Non-linearity < 1%
- Global PRNU < 1%
- Typical hot pixel count < 0.001%
- Power 240mW in nominal operation

Pixel architecture and signal path

caeleste

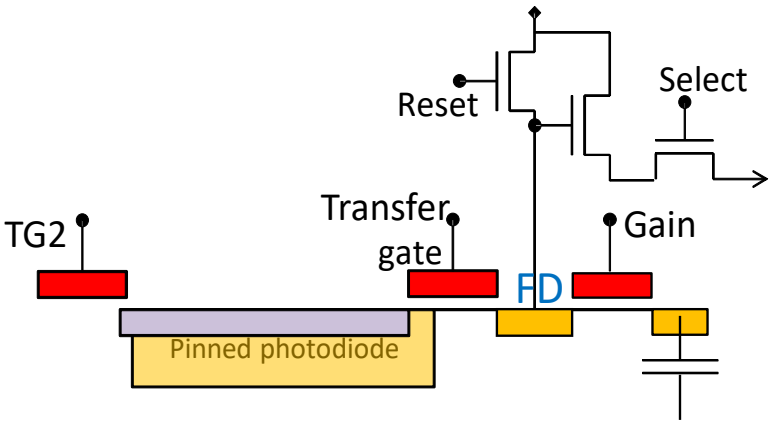

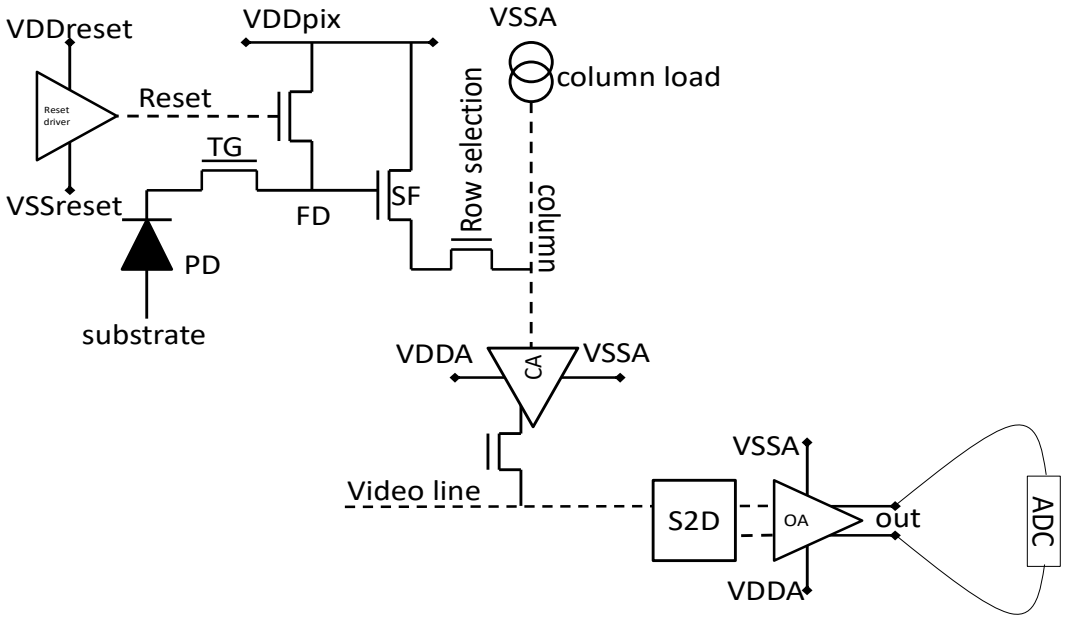

FWC
- High gain: 40 ke-
- Low gain: 260 ke-

Test and qualification plan

caeleste

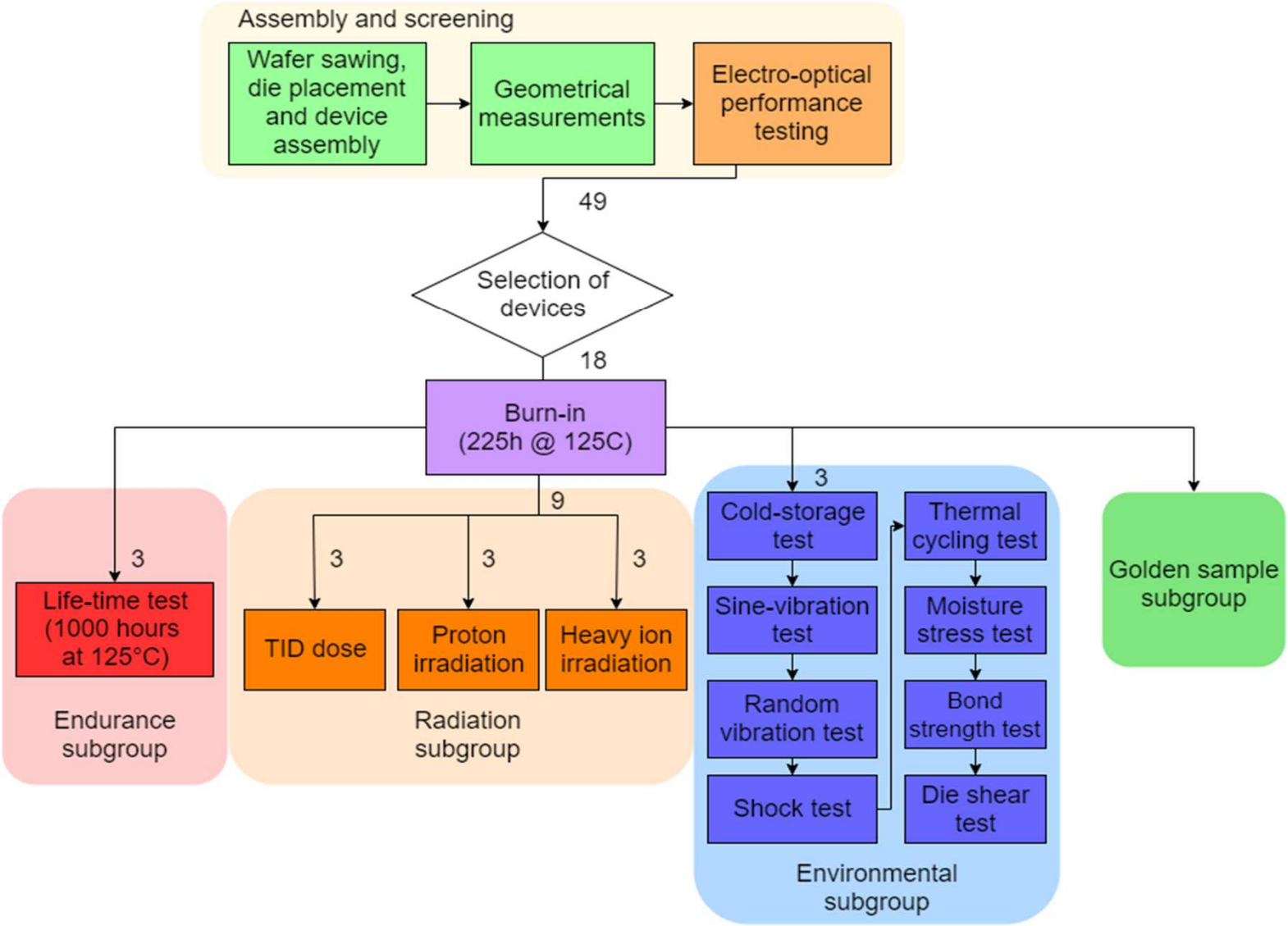

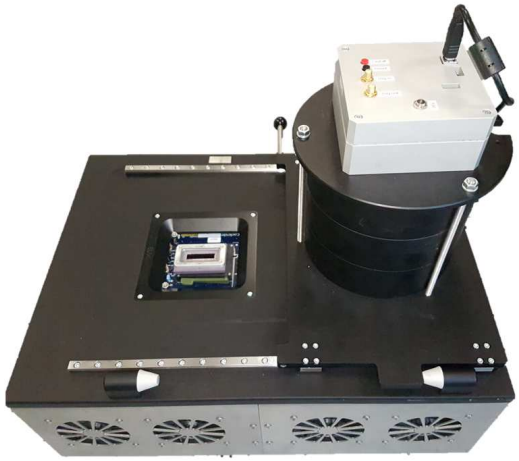

Stand-alone tester

TID radiation

caeleste

- ELOIS is rad-hard designed for TID, SEL and SEU
- TID testing at ESTEC

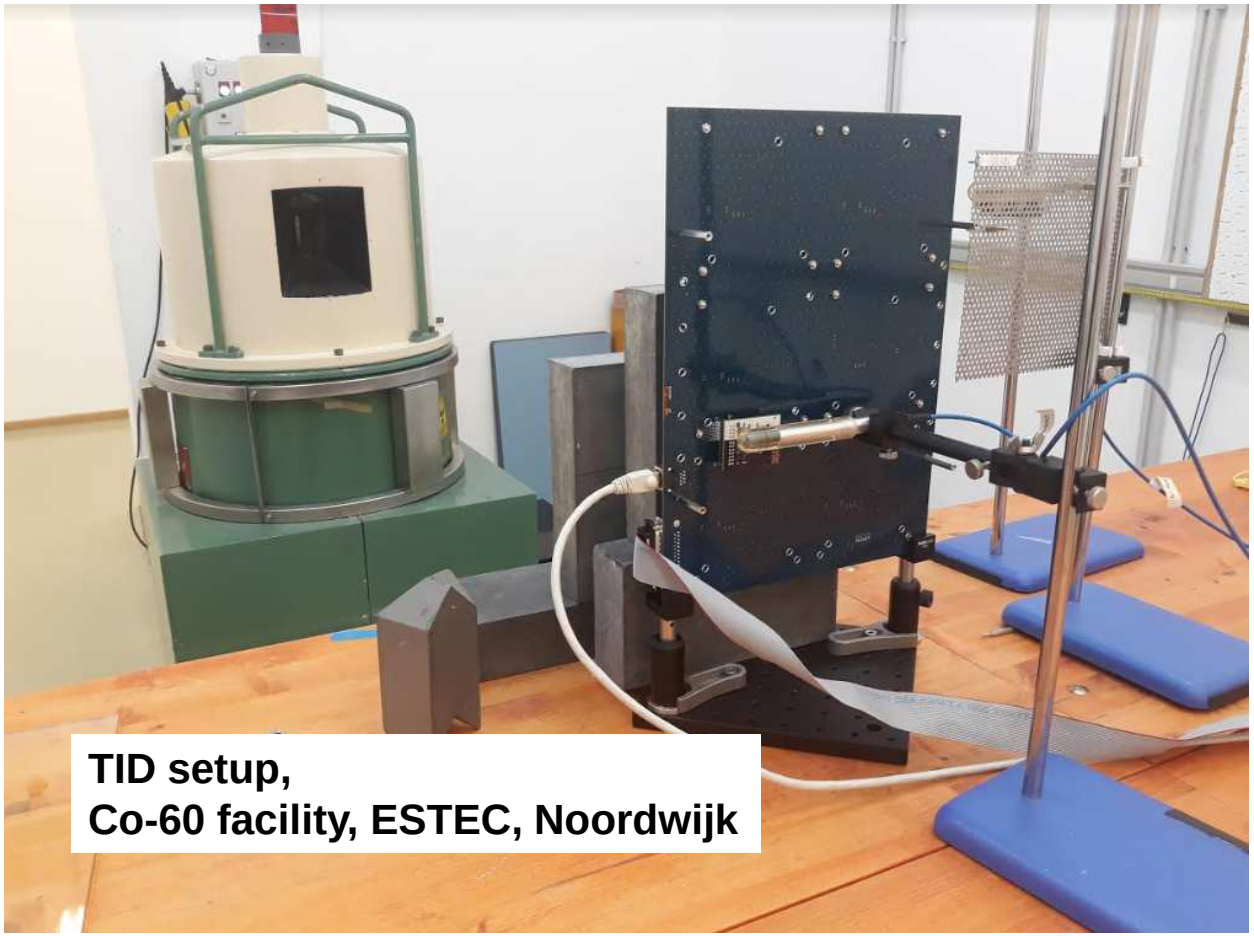

TID setup,
Co-60 facility, ESTEC, Noordwijk

TID radiation results

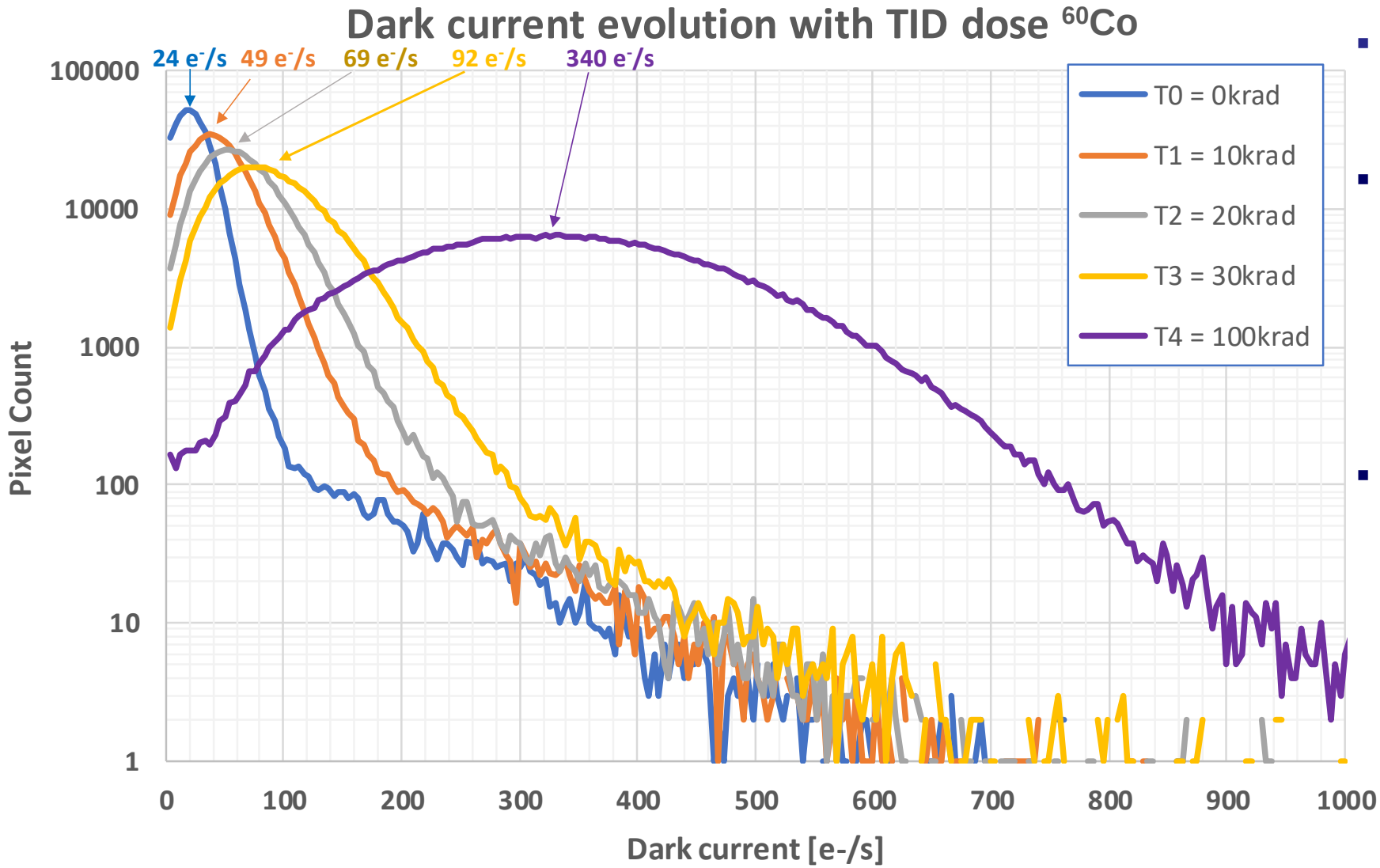

- No specific backside treatment was done
- In the FSI variant of a similar sensor in the same technology, we have observed no significant increase of dark current
- This strongly suggests that the increase of dark current originates from damage at the backside

QE results

caeleste

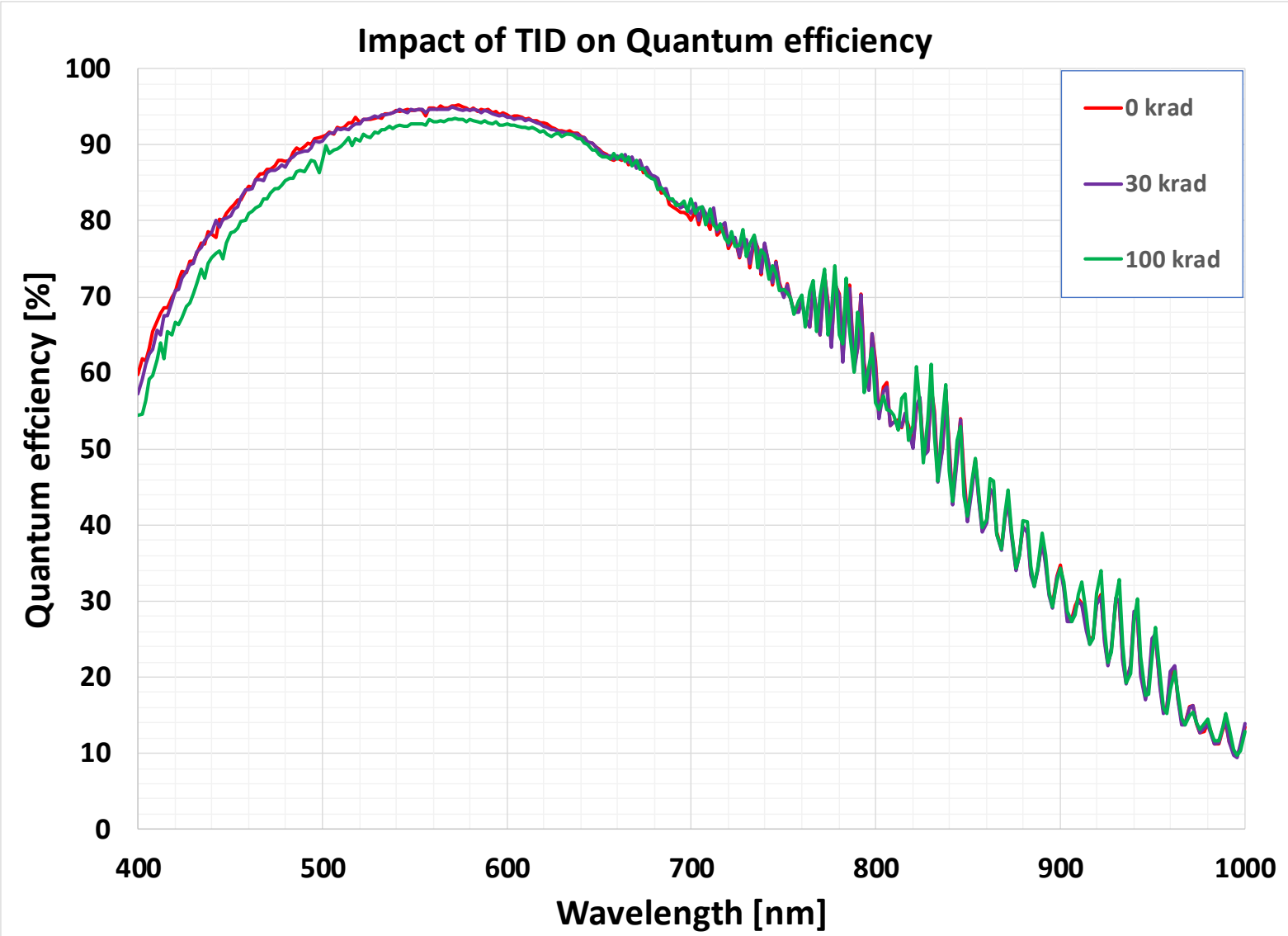

- QE degradation not significant for exposure up to 30krad.
- After 100krad, QE drops by 5% in the lower wavelength region.
- PRNU, CVF, non-linearity, power consumption and number of bad / dead pixels remain unaffected

Proton radiation results

caeleste

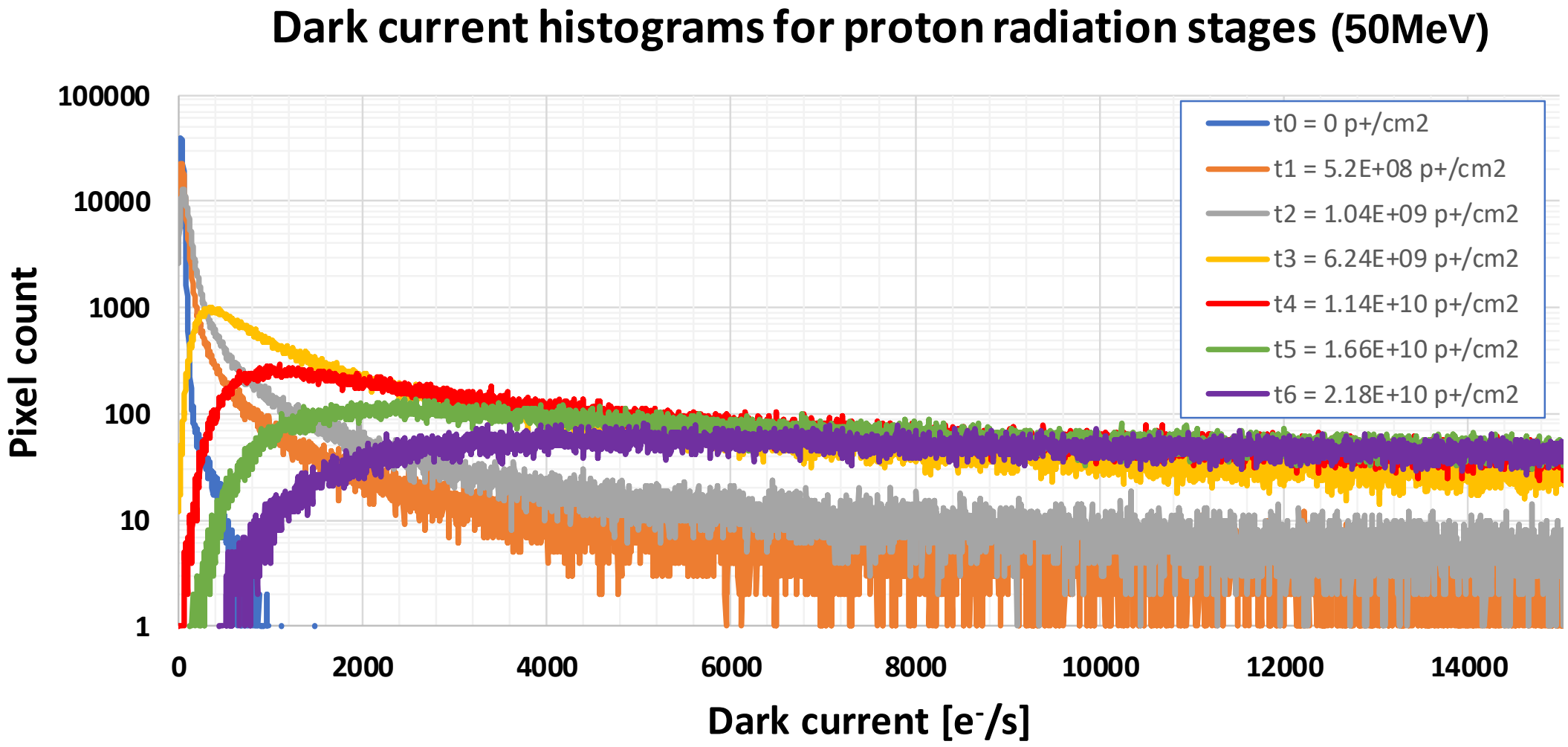

Parameter drift during proton dose

caeleste

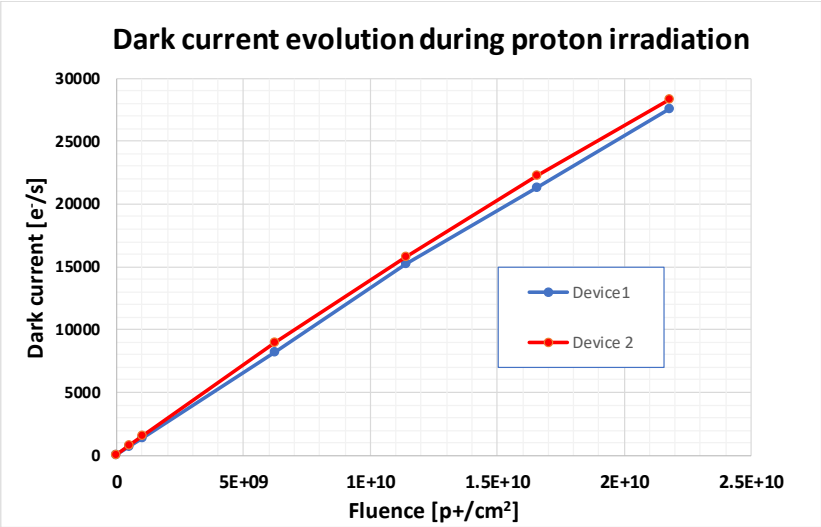

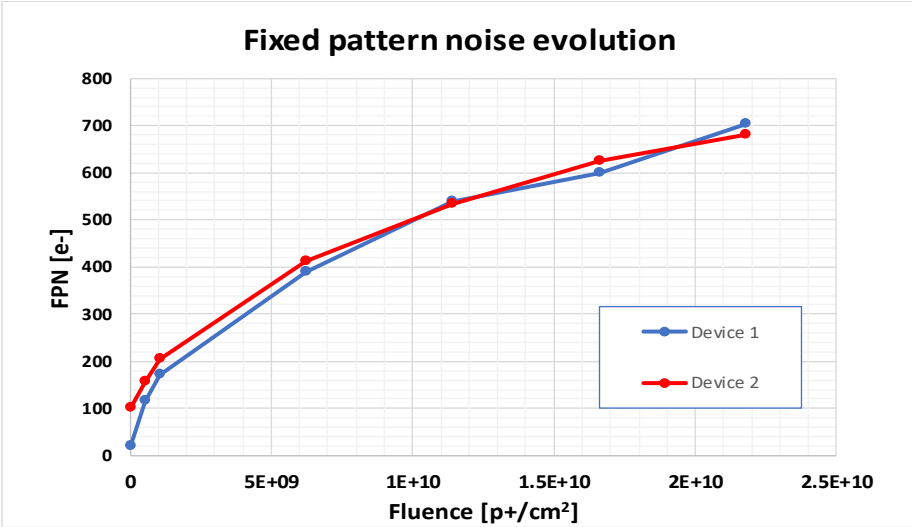

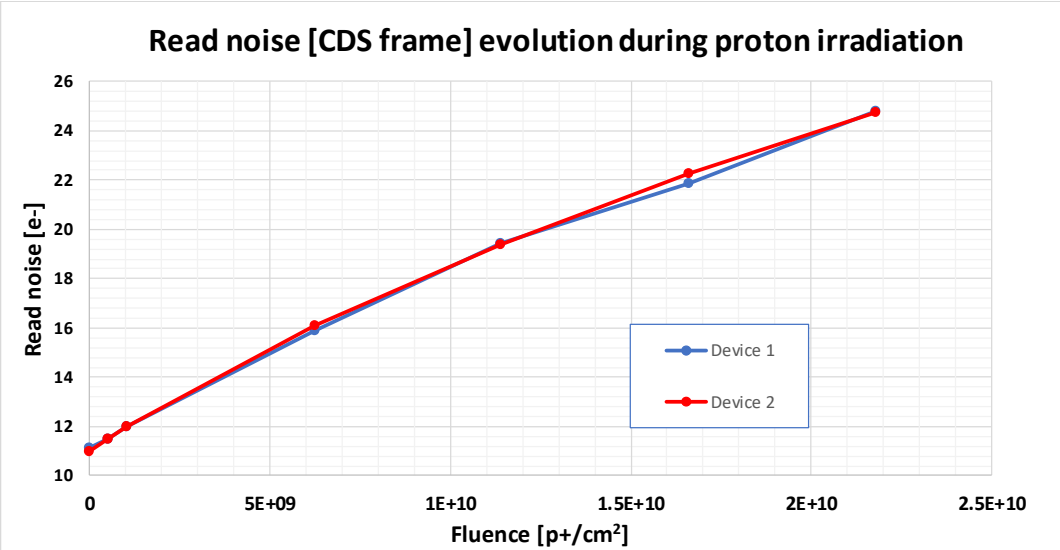

Proton resilience by binning

caeleste

Binning by charge redistribution

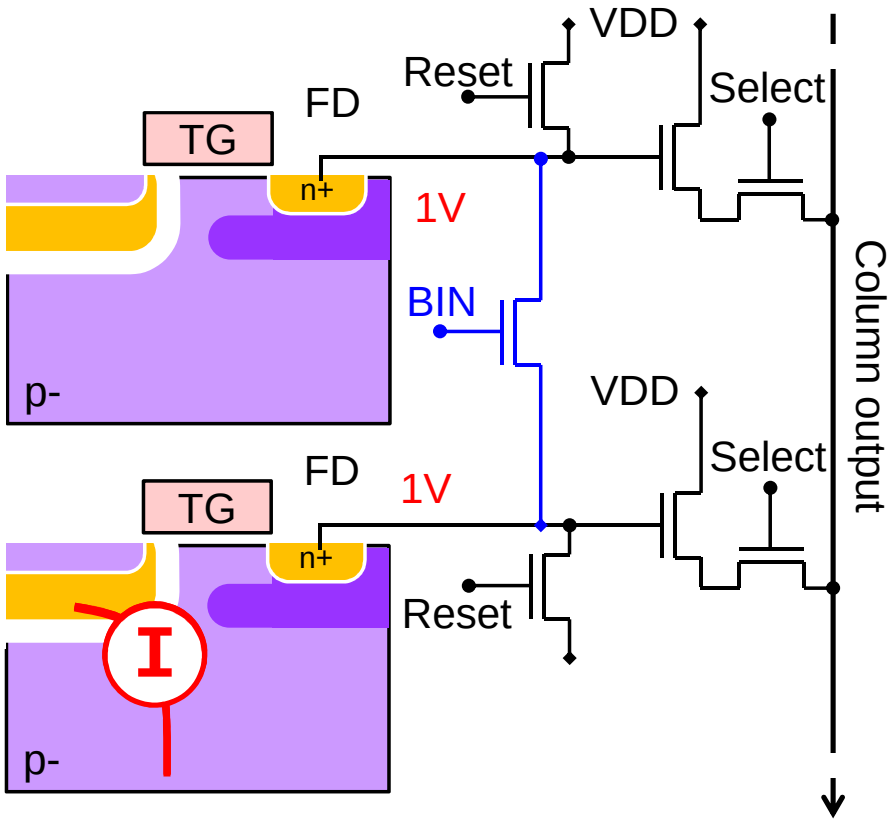

Binning by a “maximum operator”

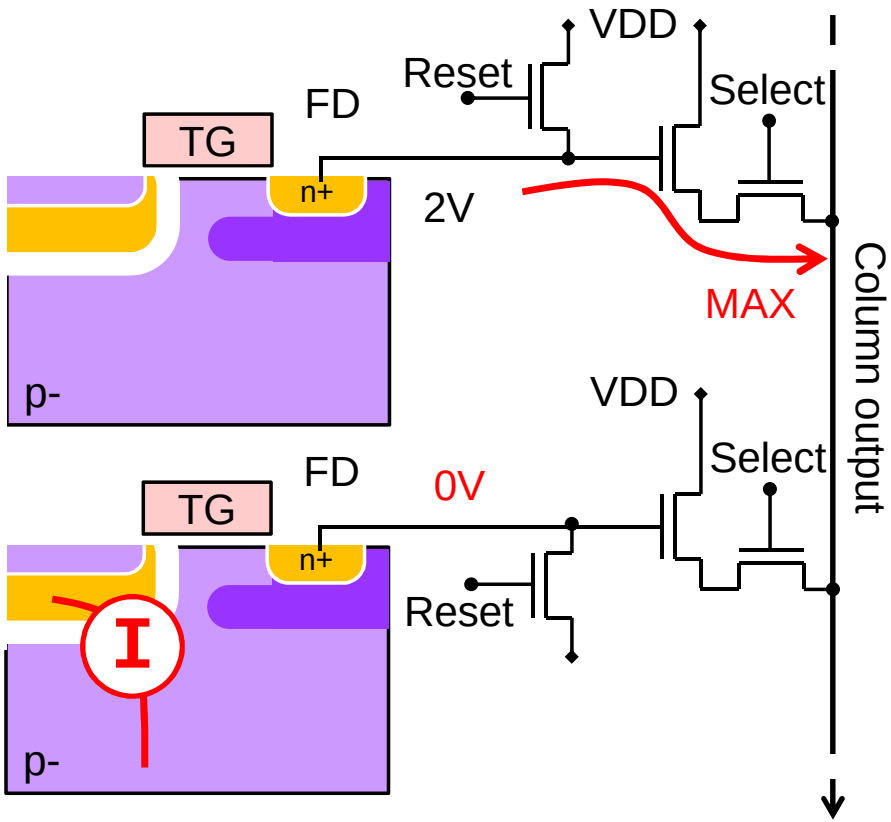

Patent US8426828

Proton resilience by binning

caeleste

- **Dark current due to total non-ionizing dose: Hot pixels, Blinking (RTS) pixels**

No binning

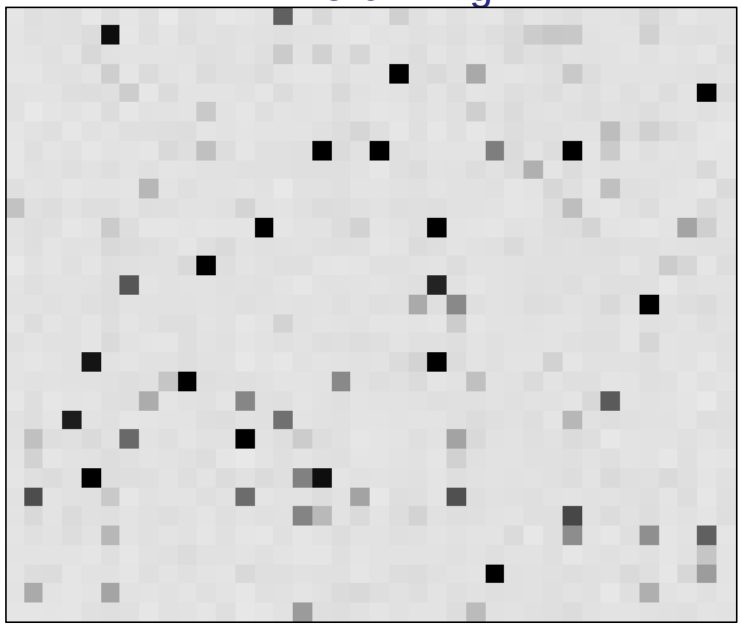

Charge domain binning

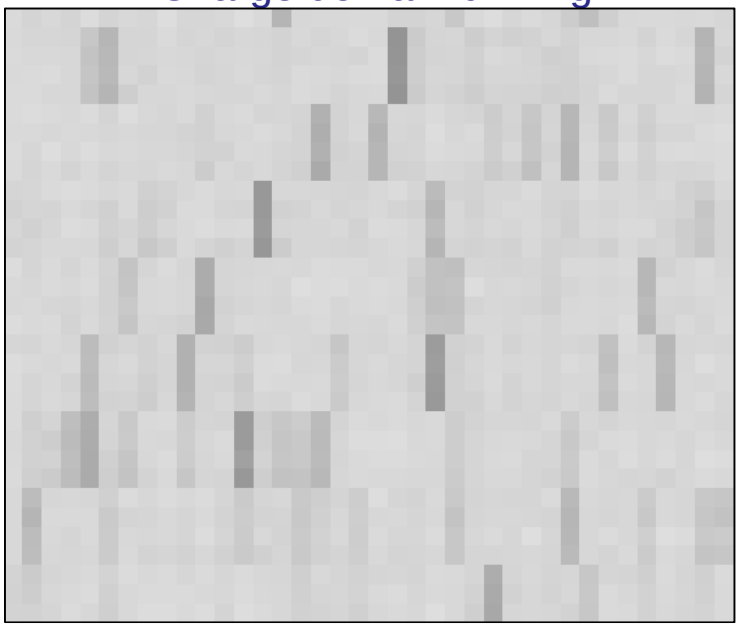

“Maximum operator” binning

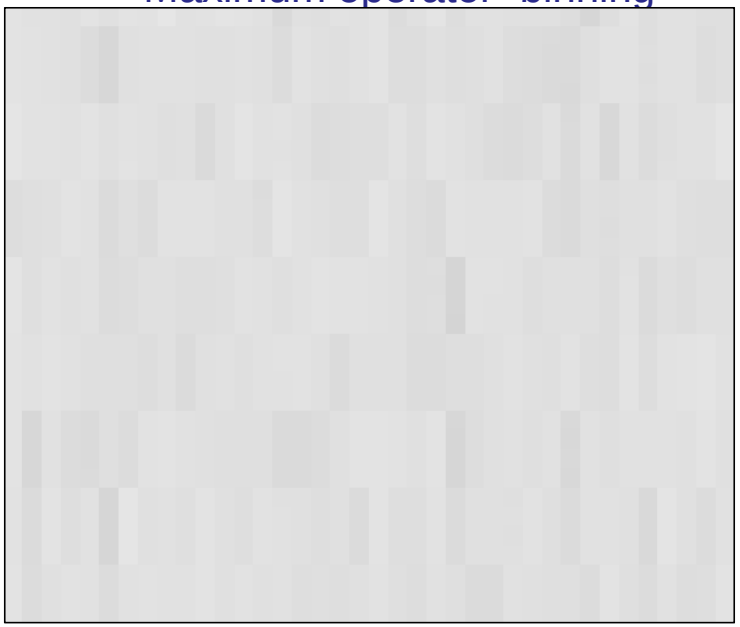

Heavy ion radiation results

caeleste

SEU countermeasures

- TMR registers
- Refresh all register bits before every frame (scrubbing)

SEL strategy

- No SEL observed. Backup strategy: excess current detection followed by power cycling.

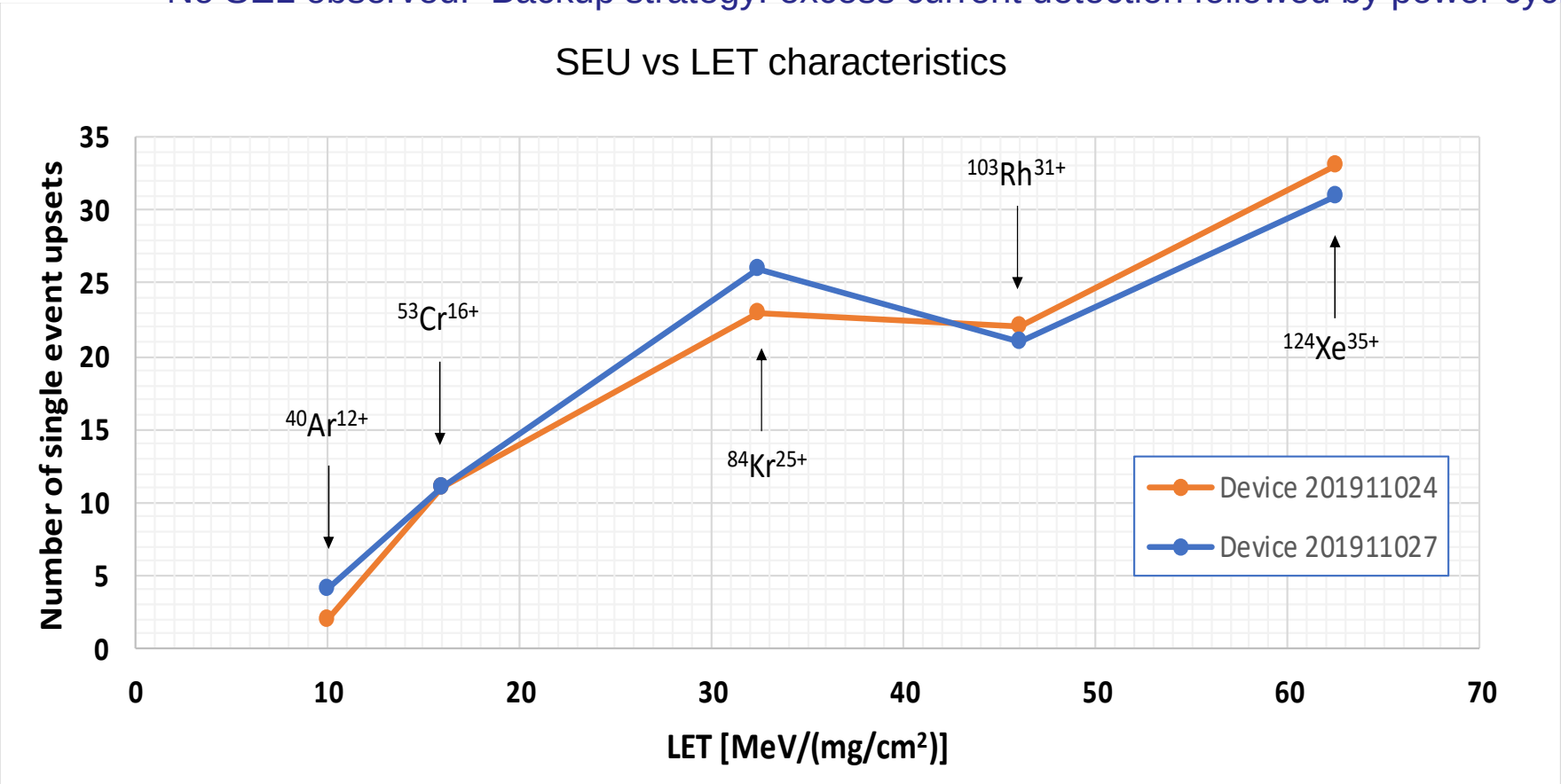

Equivalent to 7 year operation

Register refresh happened each “equivalent 8 hours”.

TMR registers fail after 2 hits in 8 (equivalent) hours.

Conclusions

caeleste

- Parameter deviation observed during endurance and environmental testing was not significant.
- Voltage domain binning improves image quality after proton radiation.
- TID, proton and heavy ion induced degradation in electro-optical specifications were well within the tolerance.
- Detector space qualification campaign was followed through successfully.

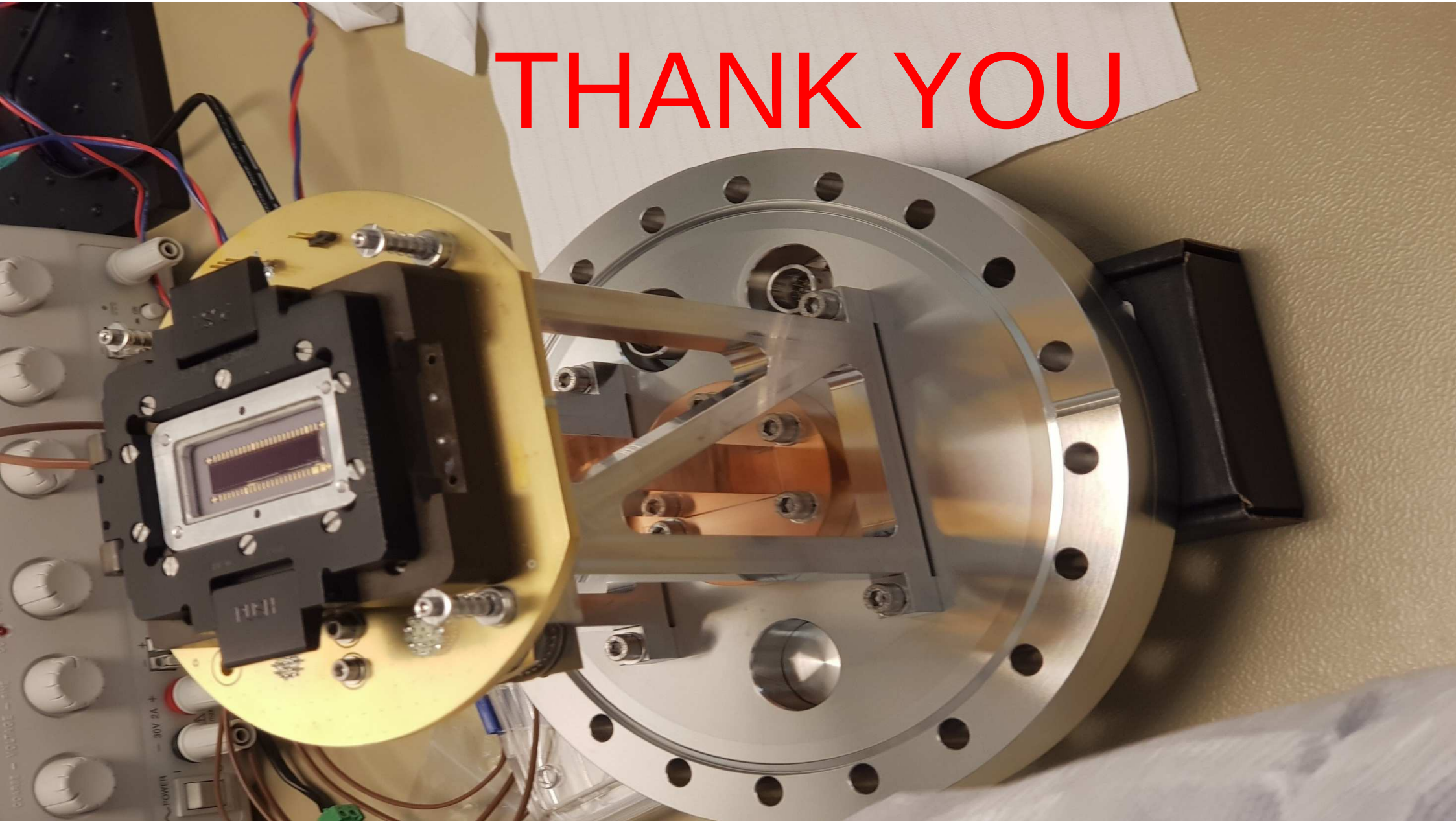
THANK YOU

Appendix

ELOIS sensor gain modes

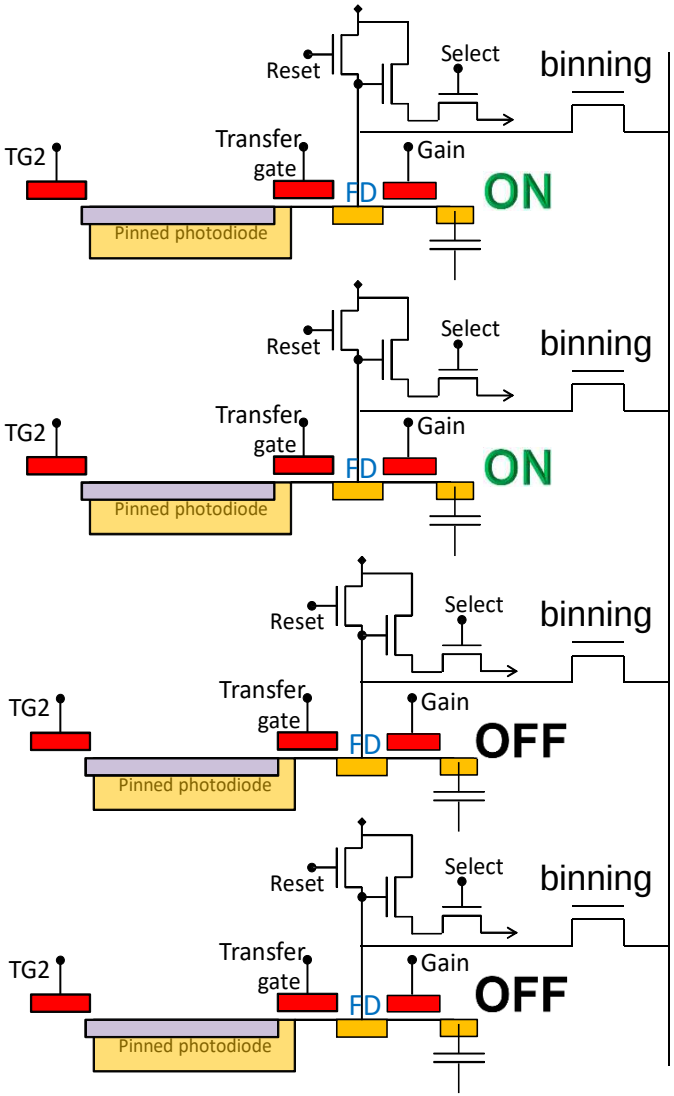

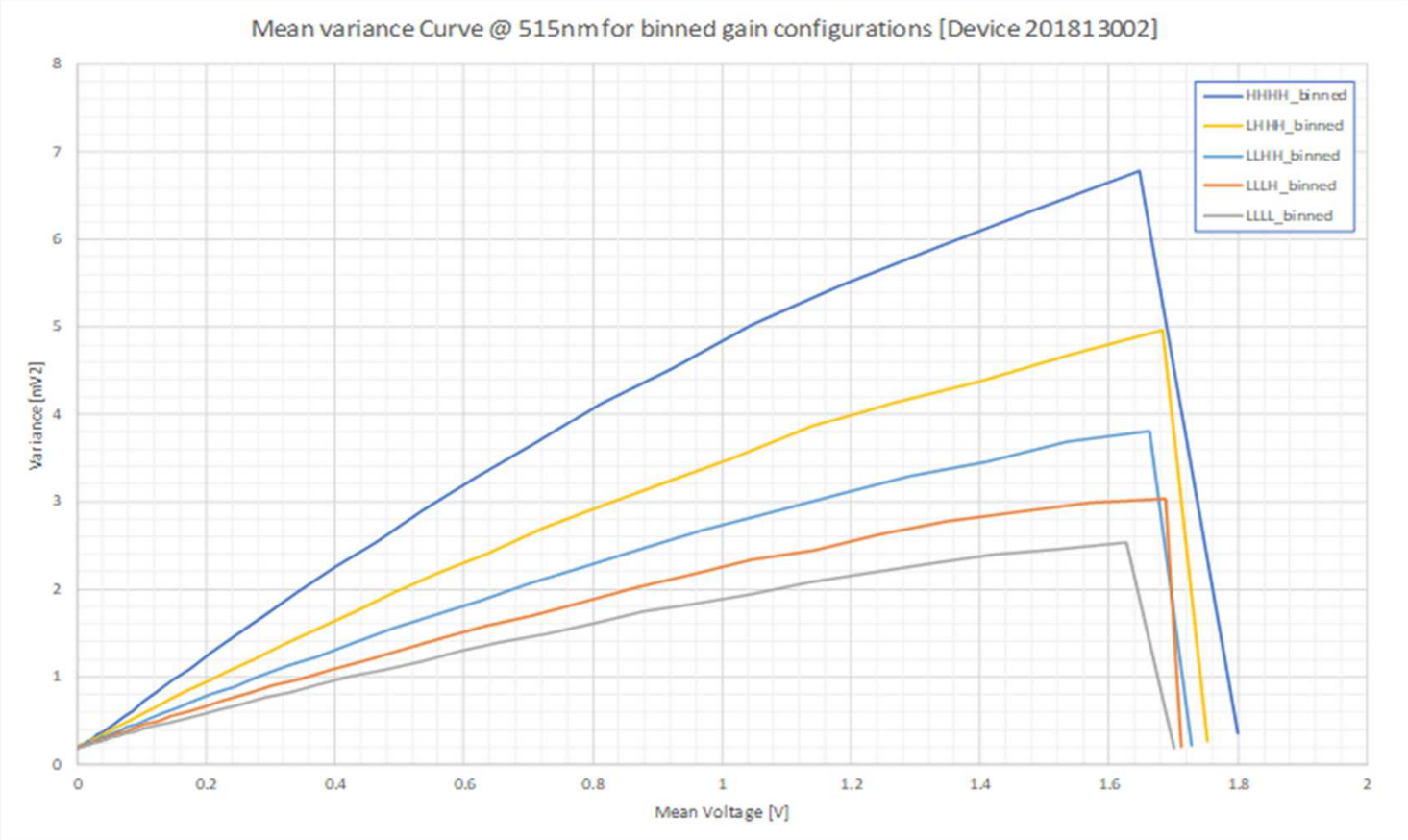

Weibull plot for SEU

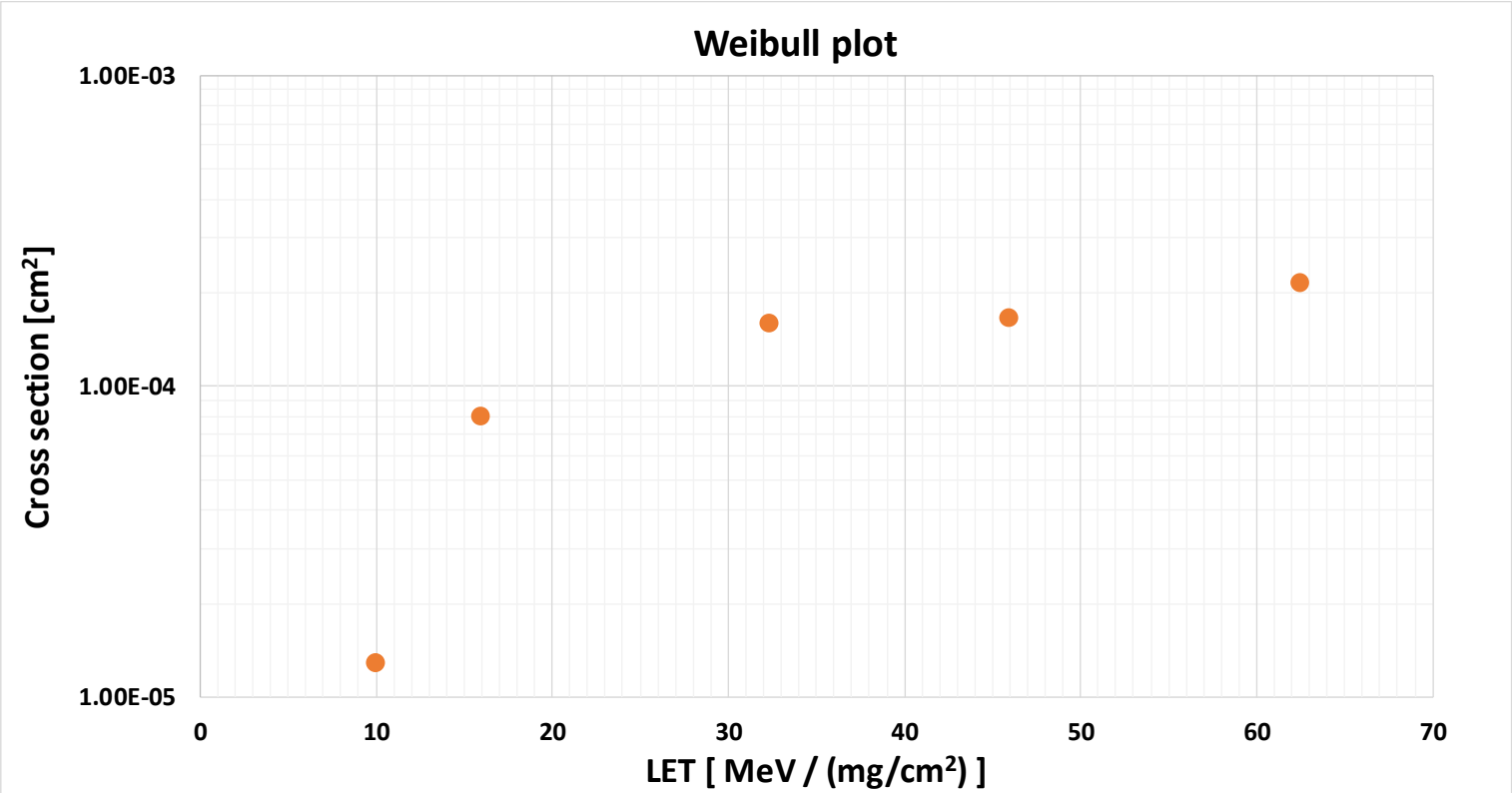

Signal path and Floor plan

caeleste

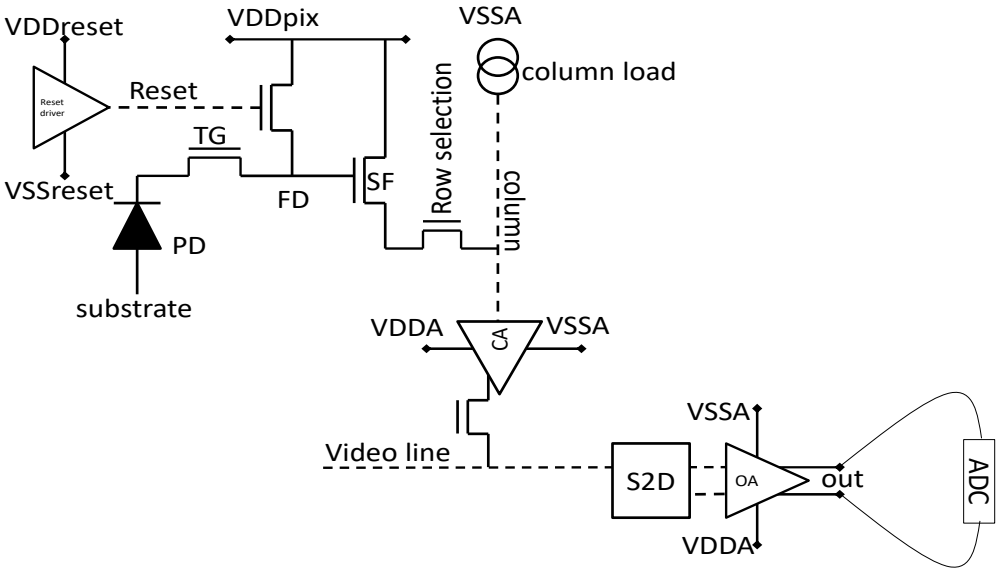

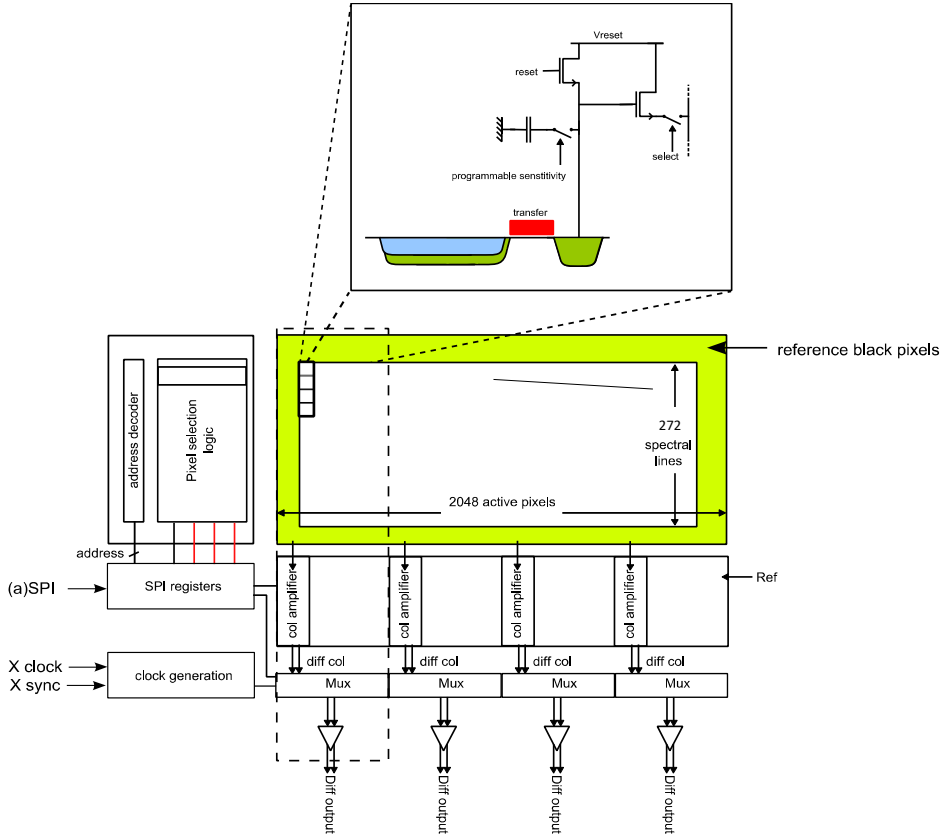

	CDS		No CDS	
	Binned	Unbinned	Binned	Unbinned
# pixels per line	512	512	512	512
# lines	68	272	68	272
ROT [µs]	7.75	7.75	7.75	7.75
pixel rate [MHz]	20	20	20	20
Pixel time [µs]	0.05	0.05	0.05	0.05
Line time [µs]	33.35	33.35	33.35	33.35
Pass time [ms]	2.267	9.071	2.267	9.071
Nr of passes	2	2	1	1
Frame time [ms]	4.535	18.14	2.267	9.071
Frame frequency [Hz]	220.4	55.1	441.1	110.24